www.jafar-valvole.it

Fabryka Armatur JAFAR S.A.
ul. Kadyiego 12, 38-200 Jasło
Tel: +39.02.37.92.08.90
sale.it@jafar.com.pl

JAFAR

Catalogue of products

JAFAR

Catalogue of products

WATER GAS SEWAGE INDUSTRY FIRE PREVENTION

Table of contents:

Sanitary fittings 4-23

- Antipollution check valves
- Public tabs
- Water meter wells
- Water sprinkler curtain

Gate valves. 24-89

- Resilient seated gate valves
- Knife gate valves
- Metal seated gate valves
- Resilient seated gate valves with actuators
- Knife gate valves with actuators

House connectors..... 90-109

- For pipe straps
- With threaded ends
- Tapping saddles
- Connectors
- Clamps

Butterfly valves 110-133

- Interflanged
- Flanged
- Butterfly check valves

Non return check valves.....134-149
Ball check valves:
- Flanged
- With threaded ends
Disc check valves:
- Flanged
- Interflanged
Pressure reducing valves

Relieve and aeration valves 150-163
- For water
- For sewage
Stainers
Gas filters

Hydrants.....164-217
- Overground
- Underground
- With plate valve
- Public taps
- Service valves

Accessories 218-259
- Connectors
- Repairing clamps
- Extension spindles
- Pillars
- Street boxes
- Cast iron fittings

Fittings for gas.....260-284
- Resilient seated gate valves
- Centric butterfly valve
- Ball valves
- Filters
- Spindle extension
- Street boxes

Valve control mode.....285-287

Water meter bracket
with straight and oblique globe valve

PN16

WATER

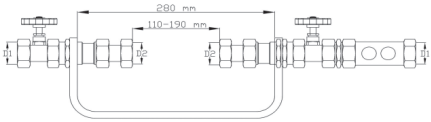

DN	Indeks	D1	D2
15	TH-1026-0015-4	3/4"	3/4"
20	TH-1026-0020-4	1"	1"

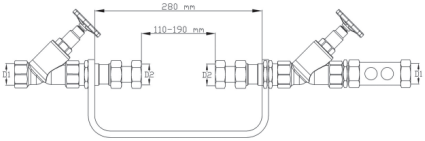

DN	Indeks	D1	D2
15	TH-1027-0015-4	3/4"	3/4"
20	TH-1027-0020-4	1"	1"

Product description (standard execution):

- Water meter installation length: 110-190 mm
- Possibility to install a water meter for water supply connection in accordance with applicable standards
- Suitable water meters assembling
- Antipollution check valves equipment
- Epoxy coating anticorrosion protection

Application:

Water lines networks: potable water with working pressure 1.6 MPa and temp. up to +70°C.

Globe valve
brass straight, brass oblique

PN16

WATER

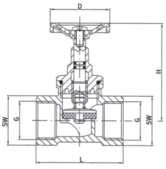

Indeks	G	L	H	D
TH-1101-0015-4	15	52	60	50
TH-1101-0020-4	20	60	67	50
TH-1101-0025-4	25	72	82	60

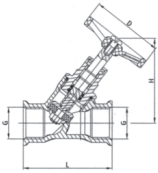

Indeks	G	L	H	D
TH-1106-0020-4	20	61	65	50
TH-1106-0025-4	25	74	86	70

Product description (standard execution):

- Body and head made of brass – corrosion resistant
- Brass seat with EPDM closing device
- Bigger flow for oblique type
- Easy head disassembling
- Longer durability comparing to ball valve

Application:

Water lines networks: potable water with working pressure 1.6 MPa and temp. up to +70°C.

We reserve the rights to modify the production program and the given data without separate notices due to the permanent company development

Antipollution check valve EA
threaded and flange ends

PN16

WATER

Dn65 flange ends

DN32 threaded

Product description (standard execution):

- Easy control of internal parts without dismounting
- Body made of ductile cast iron EN-GJS 400-15 (DN50-DN200); forged brass for DN15-DN50
- Operates in any position for diameters DN15-DN50 threaded
- No hydraulic impacts
- High and low pressure tightness
- Silent working - compact design
- Inspection holes with corks
- Spring-assisted closing
- Anticorrosion material internal parts
- Body bonnet Zinc coated screws protected by wax
- Epoxy coating minimum 250 microns according to EN 14901
- Article according to EN 1717; EN 12729
- Threaded connections - inch pipe thread according to EN 10226-1 pressure PN10 PN16 for DN15-DN50
- Flange connection according to EN 1092-2 (DIN2501) pressure PN10 PN16 for DN50-DN200
- Article marking according to EN 19; EN 1074

Application:

Water lines networks: potable water back flow protection. Max. working pressure 1.6MPa and temp. up to +70°C

Test control:

Water pressure test according to EN 1074-1; EN 1074-2; EN 12266-1
Seat: 1,1 x PN
Body: 1,5 x PN

Installation:

According to below scheme

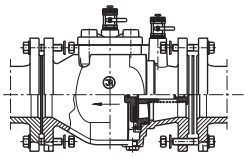

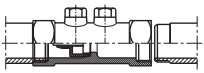

Threaded

DN	Gw	D	L	Weight
[mm]				[kg]
15	1/2"	26	65	0,13
20	3/4"	33	75	0,22
25	1"	40	90	0,37
32	5/4"	49	105	0,62
40	6/4"	56	120	0,78
50	2"	68	150	1,19

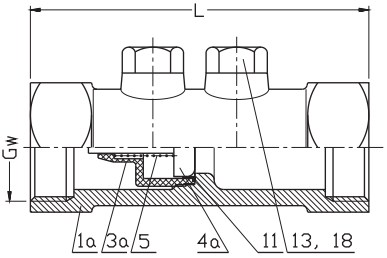

Flange

DN	L	D	K	d	l x n	Weight
[mm]						[kg]
50	200	165	125	102	19x4	11,0
65	240	185	145	122	19x4	13,5
80	260	200	160	138	19x8	17,0
100	300	220	180	158	19x8	23,0
150	400	285	240	212	23x8	42,0
200	500	340	295	268	23x12(8)	57,5

Instance antipollution check valve

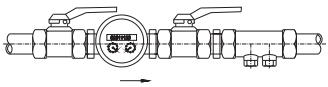

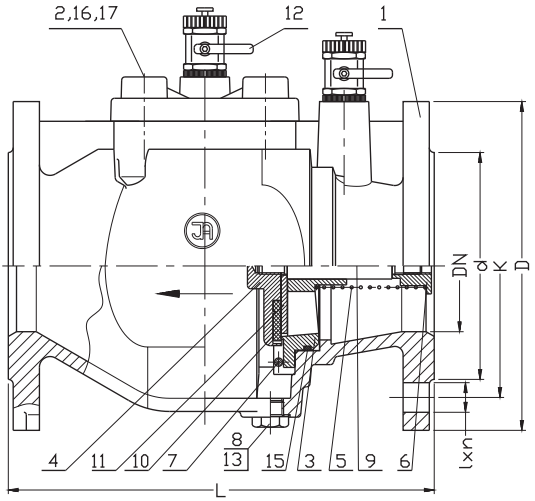

No.	Part	Standard execution
1	Body	Ductile cast iron EN-GJS 400-15 EN 1563
1a	Body	Brass CW617N EN 12165
2	Bonnet	Ductile cast iron EN-GJS 400-15 EN 1563
3	Cann	Brass CW617N EN 12165
3a	Cann	POM
4	Valve plug	Brass CW617N EN 12165
4a	Valve plug	POM
5	Spring	Stainless steel 1.4301 EN 10088-1
6	Nut	Brass CW617N EN 12165
7	Ring set	Stainless steel 1.4301 EN 10088-1
8	Washout	Brass CW617N EN 12165
9	Pin	Stainless steel 1.4301 EN 10088-1
10	Clamping plate	Stainless steel 1.4301 EN 10088-1
11	Gasket	Rubber EPDM EN ISO 1629
12	Ball velve	Brass CW617N EN 12165
13-15	O-ring	Rubber EPDM EN ISO 1629
16	Screw	Steel Fe/Zn5, stainless steel EN ISO 4762
17	Screw stopper	Wax
18	Packing cork	Brass CW617N EN 12165

- other material variants on special request

Pressure graph for valves 1300 PN10

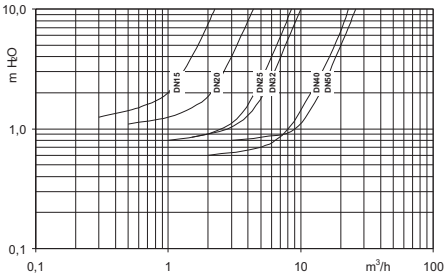

Pressure graph for valves 1300 PN16

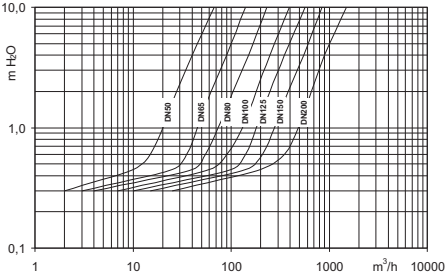

We reserve the rights to modify the production program and the given data without separate notices due to the permanent company development

Antipollution check valve BA
flanged

PN16

WATER

Na zdjęciu DN80

Product description (standard execution):

- Two closing devices with intermediate chamber to separate inflow from outflow zone
- No hydraulic impacts
- Low medium resistance – smooth surfaces
- High and low pressure tightness
- Silent working - compact design
- Pressure changes insensitivity
- Repair and maintenance without dismounting from installation
- Access eye to check closing tightness and water sampling. Additional hole for vertical drainage system.
- Body bonnet Zinc coated screws protected by wax
- Epoxy coating minimum 250 microns according to EN 14091
- Article according to EN 1717; EN 12729
- Flange connection according to EN 1092-2 (DIN2501) pressure PN10; PN16
- Article marking according to EN 19; EN 1074

Application:

Water lines networks: potable water back flow protection. Max. working pressure 1.6MPa and temp. up to +70°C

Test control:

Water pressure test according to EN 1074-1; EN 1074-2; EN 12266-1
Seat: 1,1 x PN
Body: 1,5 x PN

Installation:

According to below scheme

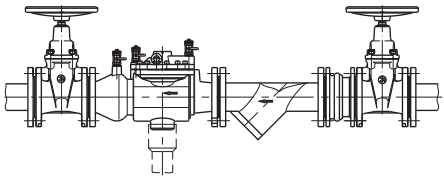

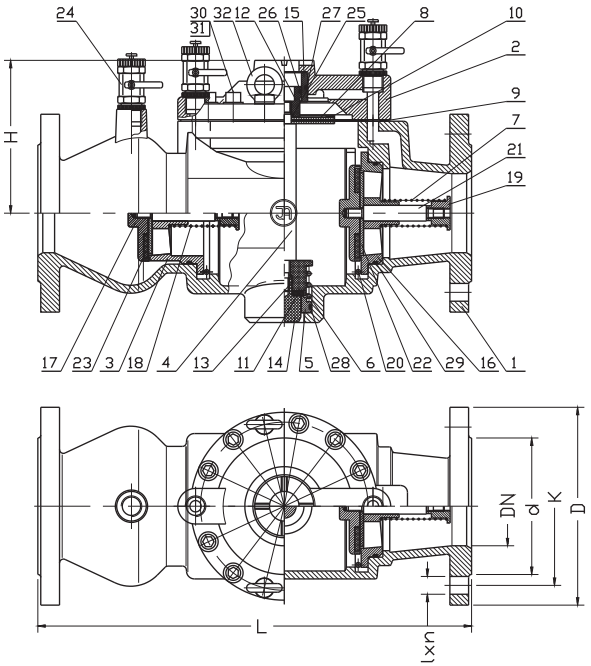

No.	Part	Standard execution
1	Body	Ductile cast iron EN-GJS 400-15 EN 1563
2	Bonnet	Ductile cast iron EN-GJS 400-15 EN 1563
3	Cann	Brass CuZn39Pb1Al-B EN 1982
4	Stem	Brass CuZn39Pb1Al-B EN 1982
5	Socket	Stainless steel 1.4021 EN 10088-1
6, 7, 18	Spring	Stainless steel 1.4021 EN 10088-1
8	Clamping	Stainless steel 1.4021 EN 10088-1
9	Membrane	Rubber EPDM EN ISO 1629
10, 11, 23	Gasket	Rubber EPDM EN ISO 1629
12	Głowiczka	POM
13	Valve plug	POM
14	Cann valve plug	Brass CuZn39Pb1Al-B EN 1982
15	Sleeve	POM
16	Cann	Brass EN 1982
17	Valve plug	Brass EN 1982
19	Nut	Brass EN 1982
20	Ring	Stainless steel 1.4021 EN 10088-1
21	Pin	Stainless steel 1.4021 EN 10088-1
22	Clamping plate	Stainless steel 1.4301 EN 10088-1
24	Ball valve	Catalogue producer
25-29	O-ring	Rubber EPDM EN ISO 1629
30	Screw	Stainless steel EN ISO 4762
31	Washer	Stainless steel EN ISO 7091
32	Screw	EN-92/M-82472

- other material variants on special request

* Implementation

DN	L	H	D	d	K PN16 (PN10)	l PN16 (PN10)	n PN16 (PN10)	Weight
[mm]							-	[kg]
65*	356	150	185	122	145	19	8	-
80	440	155	200	138	160	19	8	30,0
100*	530	180	220	158	180	19	8	-
150*	630	210	285	212	240	23	8	-
200*	765	240	340	268	295	23	12(8)	-
250*	770	270	405	320	355 (350)	28 (23)	12	-

We reserve the rights to modify the production program and the given data without separate notices due to the permanent company development

Public tab

WATER

Public tab 1700
column stainlees steel

Public tab 1710
column texture

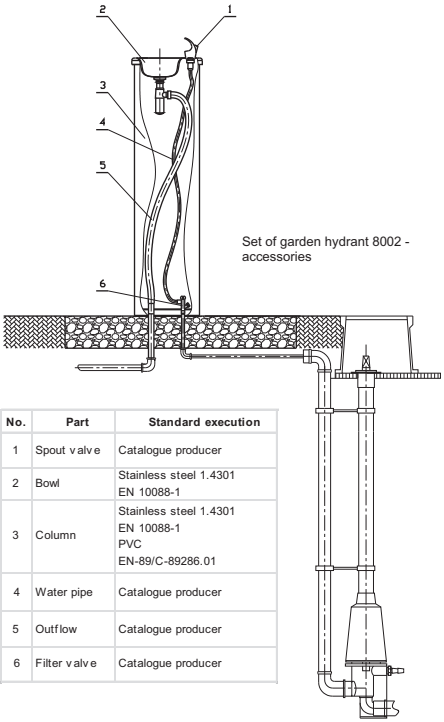

Set of garden hydrant 8002 - accessories

Product description (standard execution):

- Stainless steel stand – wall thickness 1.3 [mm] fig. 1700 or structural imitation stone fig 1710
- Bowl made of stainless steel
- Open-close bib valve made of chrome-plated and polished brass with a collar that provides distance from the outflow of drinking water
- Water stream regulation
- Valve with strainer
- Tap diameter ø314 [mm]
- Tap lenght 860 [mm]
- Drain connection Ø 32 [mm]
- Water connection 1/2 "
- Performance - 2 [l / min]

Application:

For indoor use buildings and open spaces like: parks, playgrounds

Execution variant:

Bib valve made of chrome-plated and polished brass, with function of temporary water flow out within 5[s]
Bib valve for bottles

No.	Part	Standard execution
1	Spout valve	Catalogue producer
2	Bowl	Stainless steel 1.4301 EN 10088-1
3	Column	Stainless steel 1.4301 EN 10088-1 PVC EN-89/C-89286.01
4	Water pipe	Catalogue producer
5	Outflow	Catalogue producer
6	Filter valve	Catalogue producer

We reserve the rights to modify the production program and the given data without separate notices due to the permanent company development

Public tab

WATER

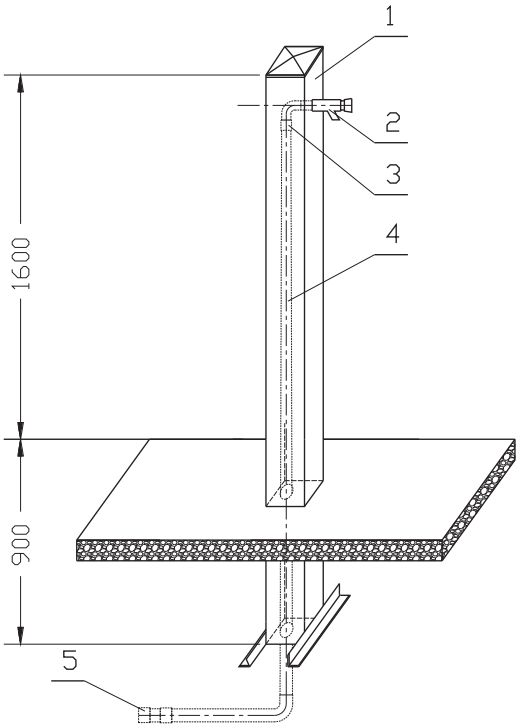

Product description (standard execution):

- Stainless steel stand – wall thickness 3 [mm] - 1.4301 with satin finish
- Bib valve made of chrome-plated and polished brass with function of temporary water flow out 6-12[s]
- 4 bib valves available – one on each wall
- Stand square 150x150[mm]
- Total length 2500 [mm]
- Overground part 1600 [mm]
- Underground part 900[mm]
- Water connection PE20

No.	Part
1	Protection
2	Spout valve
3	Connector PE 20X3/4"
4	water pipe PE 20
5	Connector PE 20

Application:

For use in open spaces like: parks playgrounds

Execution variant:

2 or 3 additional bib valves available
Trade mark on column made by laser
Other length on request

We reserve the rights to modify the production program and the given data without separate notices due to the permanent company development

Public tab
on a wall „Wawel”

WATER

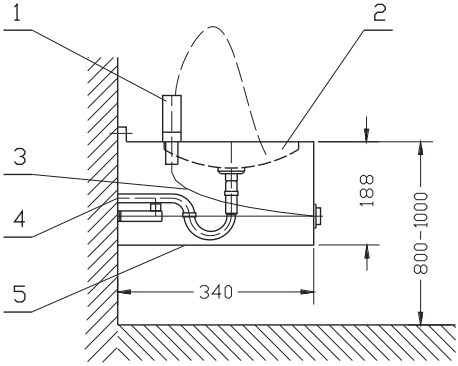

Product description (standard execution):

- Public tab made of a composite resistant to external conditions
- Rounded edges of the cover to protect against impact
- Modern design, which is a response to customer expectations and being in line with current trends on the market
- Spout made of chromed and polished brass, separated button that activates the flow of water (open-close function)
- Siphon and internal accessories built-in, the plate covering the public tab from the bottom protects against interference by unauthorized persons
- Efficiency 2 [l/min]
- Diameter of the bowl 245 [mm]
- Bowl depth 65 [mm]
- Body dimension 319/340/188 [mm]
- Pressure range 1,5-3 [bar]
- Water connection 1/2"
- Drain connection 40 [mm]

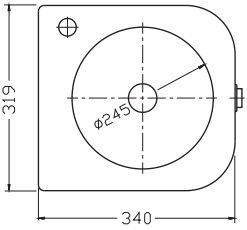

Application:

The design of the public tab is resistant to atmospheric conditions (including UV radiation) thanks to which it is adapted for use both in rooms of schools, offices, offices and open spaces. The water outflow stream allows the filling of the water bottle.

For the winter period in places with negative temperatures, public tab should be disassembled or properly protected, i.e cut off the water supply and dehydrate.

No.	Part	Standard execution
1	A spout with a separate button	Producer katalogue
2	Bowl	Composite
3	Elastic hose	Producer katalogue
4	Outflow line	Producer katalogue
5	Cover plate	Stainless steel 1.4301 EN 10088-1

Execution variant:

- The spout can be mounted in any corner of the device
- Possibility to install a valve with temporary water or spout discharge open-close type integrated with the actuator button, with a collar providing a distance from the outflow of drinking water
- The possibility of using a body color other than the standard (RAL5012) - after consultation

We reserve the rights to modify the production program and the given data without separate notices due to the permanent company development

Public tab
on a wall

WATER

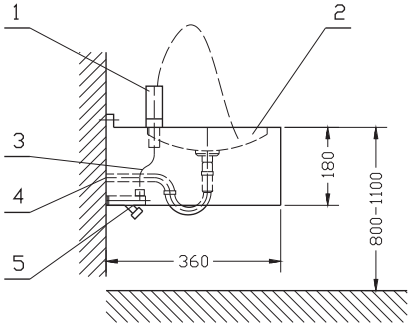

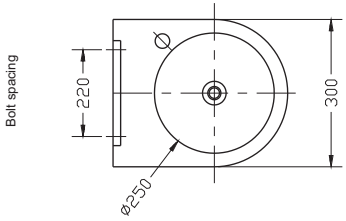

Product description (standard execution):

- Body made of stainless steel 1.4301 - polished
- Bib valve made of chrome-plated and polished brass, with function of temporary water flow out within 5[s]
- Performance - 2 [l / min]
- Bowl depth 50 [mm] wall thickness 1.5 [mm]
- Pressure range 1,5-3 [bar]
- Water connection 1/2 "
- Drain connection Ø 40 [mm]
- Dimension body standard 180 [mm]
- The body length of 240 mm, a closed bottom, completely rebuilding the siphon. see: 1740-ZK

Application:

For indoor use buildings and open spaces like: parks, playgrounds

Execution variant:

Open-close bib valve made of chrome-plated and polished brass with a collar that provides distance from the outflow of drinking water (no temporary water flow out function).
Bowl overprint available laser technology

No.	Part
1	Spout valve
2	Bowl
3	Hose
4	Outflow
5	Valve

We reserve the rights to modify the production program and the given data without separate notices due to the permanent company development

Public tab
with 2 or 3 bowl

WATER

Public tap P/N 1750-2N

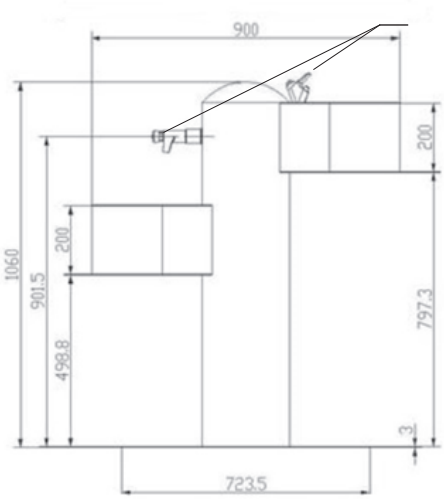

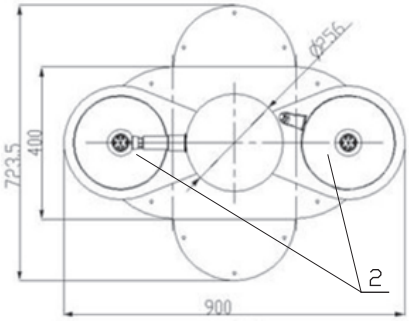

Product description (standard execution):

- Body and bowl made of stainless steel 1.4301 - polished
- Bib valve made of chrome-plated and polished brass for improved hygiene of use
- Time-limited bib valve over the bottom bowl for dispensing water to bottles or cups
- Esthetic design
- Public tap assembly height: 1060 mm
- Width (max): 900x723,5 mm
- Bowl installation height: top bowl: 797,3 mm; bottom bowl: 499,8 mm
- Water connection pipe: 1/2"
- Drain connection dia. 40 mm
- Flow rate: 2 l/min

Application:

Public taps are intended for outdoor installation and use, e.g. in parks, at playgrounds, outdoor sports stadiums, or other types of rest and recreation areas.

If temperatures below the water freezing point occur in winter, remove the public tap or secure it against damage from freezing by isolating the water supply and draining (by underground hydrant), or by connecting the public tab to a water-meter well with winter drainage.

Execution variant:

Animal watering bowl with step-on valve actuator

No.	Part	Standard execution
1	Spout with bib valve	Manufacturer's catalogue
2	Bowls	Steel 1.4301 EN 10088-1

We reserve the rights to modify the production program and the given data without separate notices due to the permanent company development

1750-2M
1750-3M

Public tap P/N 1750-3M

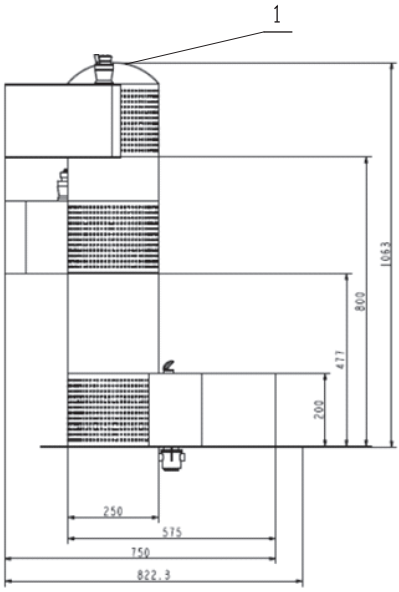

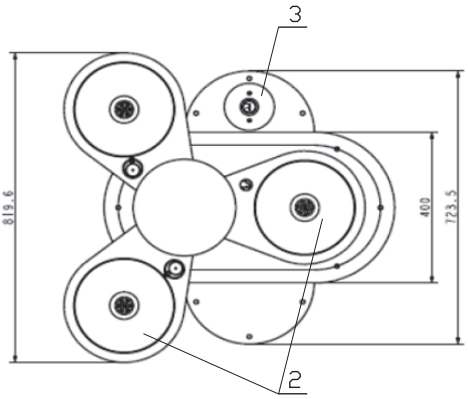

Product description (standard execution):

- Body and bowl made of stainless steel 1.4301 - polished
- Three bowl located at different height from the ground for adults, children, disabled and animals.
- Bib valve made of chrome-plated and polished brass for improved hygiene of use
- Self-closing bib valve
- Animal watering bowl with step-on valve actuator
- Esthetic design
- Water connection pipe: 1/2"
- Drain connection dia. 40 mm
- Flow rate: 2 l/min
- Weight: 36 kg

Application:

Public taps are intended for outdoor installation and use, e.g. in parks, at playgrounds, outdoor sports stadiums, or other types of rest and recreation areas.

If temperatures below the water freezing point occur in winter, remove the public tap or secure it against damage from freezing by isolating the water supply and draining (by underground hydrant), or by connecting the public tab to a water-meter well with winter drainage.

Execution variant:

Two bowl public tap

No.	Part	Standard execution
1	Spout with bib valve	Manufacturer's catalogue
2	Bowls	Steel 1.4301 EN 10088-1
3	Step-on valve actuator	Manufacturer's catalogue

We reserve the rights to modify the production program and the given data without separate notices due to the permanent company development

Water-meter well „KAJMA”

PN16

WATER

Product description (standard execution):

- Body made from PCV be installed in regions of high ground water levels without risking the influence of upward forces while readings are possible without the necessity to remove water
- Maintains temperature above zero near the water meter – it is provided with thermal insulation
- Utilizes the earth's geothermal heat
- Height 1300-1500
- Internal diameter 380 mm
- Readings of the water meter status without going down the well
- May be installed in regions of high ground water levels – the water meter is placed 30 cm below the cover (ground level)
- Height adjustment by means of spacing rings
- The water-meter set has standard connectors for water-meter DN20 and PE32 DN32 connectors
- Not affected by upward forces (which is the case with watertight wells)
- No mobile elements (e.g. hoses) which are trouble spots
- Lightweight design – ensures easy transport and installation by a single person.
- Improves working and operating conditions eliminates the necessity to use neodymium magnets
- Is safe for the user
- Readings are possible even if other people are present
- All elements resistant to corrosion

Application:

It is possible to obtain the readings outside the premises while both the system and the water meter are protected against freezing

Installation:

Recommended installation in lawns. If it is necessary to install in passageways, the well should be installed under a DN600 manhole of adequate strength

Equipment:

Water meter
Vent
Drain tap
Strainer
ISO connector

Execution variant:

Connectors for the water meter DN15 DN25 and PE connection DN40
Another depth of the trench
Another configuration of the console: Water meter connectors: Shut-off valves· Anti-pollution valve Automatic air valve PE connectors
Cover made of cast iron

1800

Description:
The “Kajma” water-meter well operates like a thermos flask. The design solution of a bottomless well makes it possible to utilize geothermal properties of the earth. The upper part of the well is properly insulated by means of a special insulating casing and insulating plug so as to protect it against freezing. Such a solution ensures that the temperature inside the well is above zero thanks to the earth's heat occurring at a given depth. The design allows for installing the water meter 30 cm below the cover and protects the connection against freezing even when the temperature reaches – 30°C. It is of key importance that the well may be installed in regions of high ground water levels without risking the influence of upward forces, while readings are possible without the necessity to remove water.

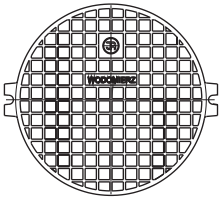

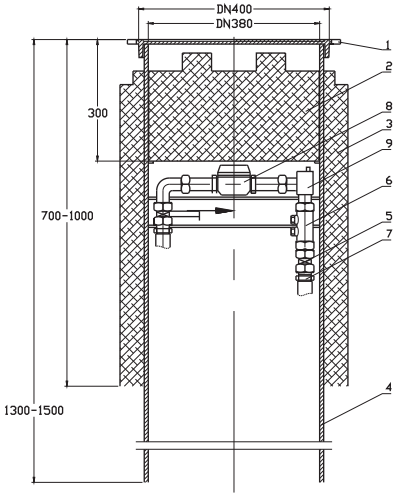

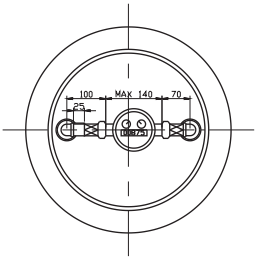

No.	Part	Standard execution
1	Cover	Plastic or grey cast iron (upon request)
2	Insulating plug	Polystyrene foam
3	Insulating casing	Polyurethane
4	Well’s housing	PVC
5	Shut-off valves	Brass; EN 1982
6	Antipollution valve	Brass; EN 1982
7	PE connections	POM
8	Water meter	Brass; EN 1982
9	Vent	Brass; EN 1982

We reserve the rights to modify the production program and the given data without separate notices due to the permanent company development

"KAJMA II" water meter well frost resistant

PN16

WATER

Product description (standard execution):

- Be installed in regions of high ground water levels without risking the influence of upward forces, while readings are possible without the necessity to remove water necessity to remove water
- Maintains temperature above zero near the water meter – it is provided with thermal insulation
- Height 1200
- Internal diameter 500 mm
- Utilizes the earth's geothermal heat
- Readings of the water meter status without going down the well
- May be installed in regions of high ground water levels – the water meter is placed 30 cm below the cover (ground level)
- Height adjustment by means of spacing rings
- The water-meter set has standard connectors for water-meter DN20 and PE32 DN32 connectors
- Not affected by upward forces (which is the case with watertight wells)
- No mobile elements (e.g. hoses) which are trouble spots
- Lightweight design – ensures easy transport and installation by a single person
- Improves working and operating conditions eliminates the necessity to use neodymium magnets
- Is safe for the user
- Readings are possible even if other people are present
- All elements resistant to corrosion

Application:

It is possible to obtain the readings outside the premises while both the system and the water meter are protected against freezing

Installation:

Recommended installation in lawns. If it is necessary to install in passageways the well should be installed under a DN600 manhole of adequate strength

Equipment:

Water meter
Vent
Drain tap
Strainer
ISO connection
Cover cast iron

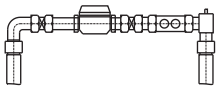

Execution variant:

Connectors for the water meter DN15; DN25 and PE connection DN40
distance rings: 100; 200; 300
Another configuration of the console: Water meter connectors: Shut-off valves
Anti-pollution valve Automatic air valve PE connectors

1850

Description:
With KAJMA II frost-resistant water meter well water meter readings can be taken outside the domestic premises. In addition the water system and the metering device is protected against freezing. With the water meter located 30 cm below the ground level positive temperatures are maintained in the winter period thanks to the application of a thermally insulated double side casing and a cover and the geothermal properties of soil. The device is equipped with an open bottom and therefore may be installed in areas where the ground water levels are high with no negative influence of uplift pressure forces and the meter readings can be taken

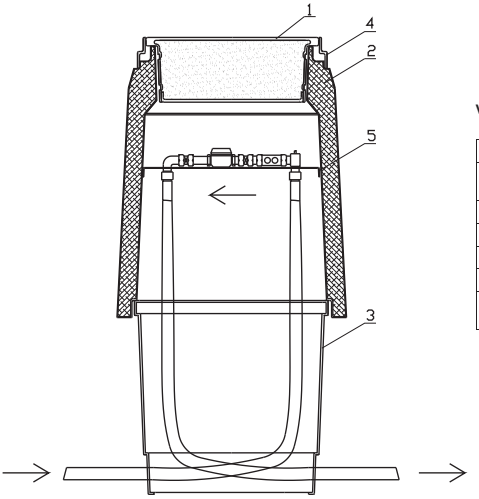

Statement of the elements

1. Cover with and isolating plug made of plastic
2. Insulated well upper body
3. Well lower body
4. Flange

Water meter set includes:

- Cut-off valves
- Antipollution valves, EA type
- Couplings PE – DN 32 (25; 40)
- Vent
- Water meter fittings

Versions of KAJMA II:

Standard execution	Dz outer tube[mm]	Catalog number
Standard version – no water meter console included	-	1850.00.00
Single water meter DN15	32, (25, 40)	1850.15.00
Single water meter DN20	32, (25, 40)	1850.20.00
Single water meter DN25	32, (25, 40)	1850.25.00
Two water meter DN20	32, (25, 40)	1850.20.20
Single water meter DN15 and Single water meter DN20	32, (25, 40)	1850.15.20

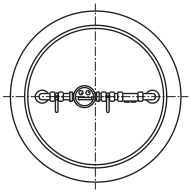

Diagram of console for two water meters, e.g. : often used as an additional water meter for "watering lawns".

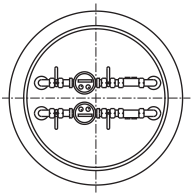

We reserve the rights to modify the production program and the given data without separate notices due to the permanent company development

Water sprinkler curtain
automatic and manual control

WATER

Sprinklers

Advertising space

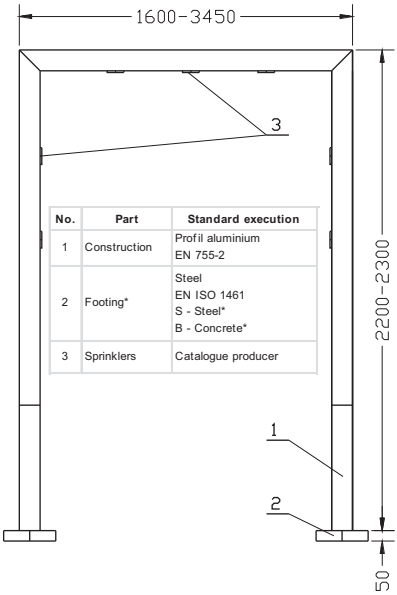

No.	Part	Standard execution
1	Construction	Profil aluminium EN 755-2
2	Footing*	Steel EN ISO 1461 S - Steel* B - Concrete*
3	Sprinklers	Catalogue producer

Product description (standard execution):

- Nozzles in the beam - see: 1910
- Nozzles in the beam and legs - see: 1911
- Aluminum profiles construction 70x70
- Steel zinc coated footing
- Shut-off ball valve 1/2 "
- Total Width from 2000/2500/3000/3450 [mm]
- 6 to 13 sprinkling nozzle
- The height of the banner 300 [mm] adjusted to the width of the curtain
- Powder painting
- **Nozzle capacity approx. 2.5 l/h**

Application:

For use in open spaces like: parks, playgrounds, street runs for body cooling

Accessories:

Advertising space on both sides from 300x2000x2500 [mm]

Execution variant:

Aluminum profiles construction 100x100 or 120x120
Total Width from 1600 to 6000 [mm]
Other executions on request

Futing steel

Futing concrete

Water sprinkler curtain
automatic and manual control

WATER

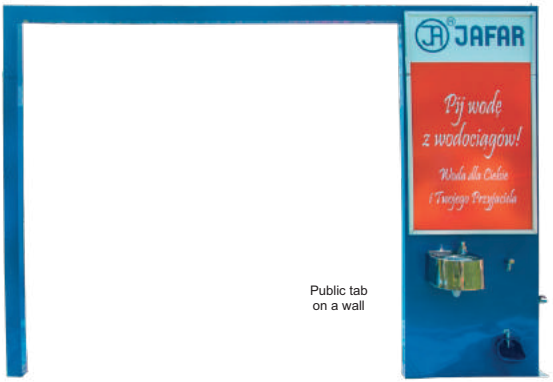

Public tab on a wall

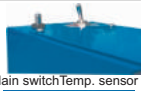

Main switchTemp. sensor

Animals drinking bowl

USB plug

Bowl Valve

Sprinklers

Solar cell

Product description (standard execution):

- Nozzles in the beam - see: 1920
- Nozzles in the beam and legs - see: 1921
- Aluminum profiles construction 100x100
- Steel zinc coated footing
- Shut-off ball valve 1/2 "
- Progressive temperature regulation for open and close
- Switch key - on request
- Total width to 3450 [mm]
- Sprinkling width from 2600 [mm]
- 6 to 10 sprinkling nozzle
- Solar panel charged solenoid valve operated by temp. sensor
- Powder painting
- **Nozzle capacity approx. 2.5 l/h**

Application:

For use in open spaces like: parks playgrounds street runs for body cooling

Accessories:

- Drinking water tap
- Animals drinking bowl
- USB charger powered by solar panels
- Counter users
- Text display LED (number of users date time text)
- Radio control or WiFi
- Advertising place 3 [m²]

Execution variant:

- Power 6V
- Stainless steel profiles construction
- Other executions on request

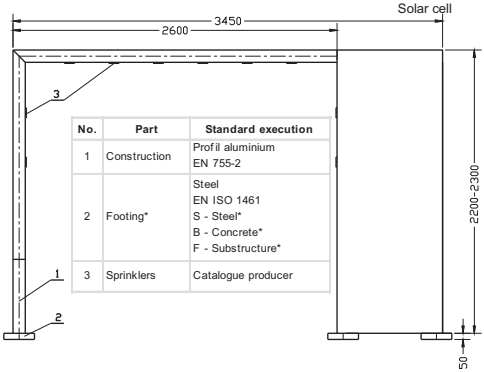

No.	Part	Standard execution
1	Construction	Profil aluminium EN 755-2
2	Footing*	Steel EN ISO 1461 S - Steel* B - Concrete* F - Substructure*
3	Sprinklers	Catalogue producer

Futing steel

Futing concrete

Futing substructure

We reserve the rights to modify the production program and the given data without separate notices due to the permanent company development

Water sprinkler pole

WATER

1930
1931

1931-C

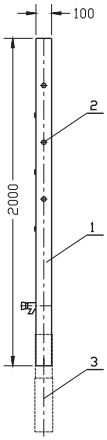

Valve time

Main valve

Sprinklers

Product description (standard execution):

- Aluminum profiles 100x100 - see: 1930
- Aluminum profiles 120x120 - see: 1931
- Valve time aluminum profiles 100x100 - see: 1931-C
- Aluminum profiles construction 100x100 or 120x120
- Steel zinc coated footing
- Shut-off ball valve 1/2 "
- Height 2000 [mm]
- 9 sprinkling nozzle
- Powder painting
- **Nozzle capacity approx. 2.5 l/h**

Application:

For use in open spaces like: parks, playgrounds, street runs for body cooling

No.	Part	Standard execution
1	Construction	Profil aluminium EN 755-2
2	Sprinklers	Catalogue producer
3	Footing*	Steel* EN ISO 1461 B - Concrete* F - Substructure*

Futing concrete

Futing substructure

We reserve the rights to modify the production program and the given data without separate notices due to the permanent company development

Sprinkler RETRO

WATER

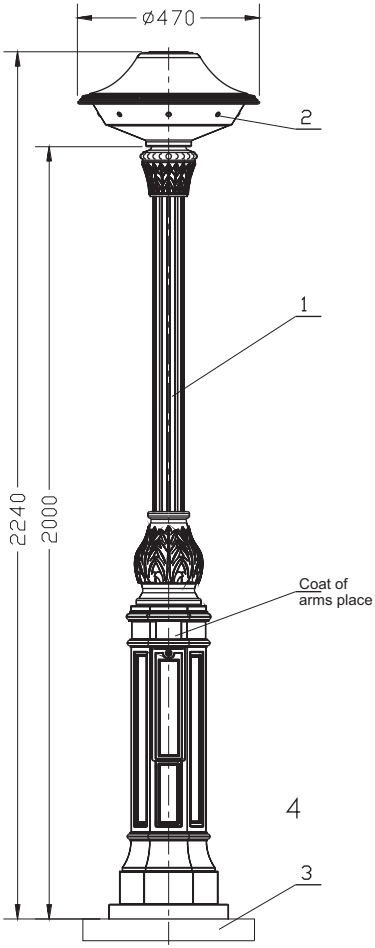

Product description (standard execution):

- Sprinkler made of aluminum castings, powder coated
- Color: black or other on request
- Eight spraying nozzles were installed in the goblet in each direction
- The diameter of the nozzle opening 0,4 [mm]
- Water consumption~ 17 l water per hour
  Manual control - see: 1940
- Ball valve 1/2"
  Automatic control - see: 1941
- Ball valve 1/2" with drive
- Temperature controller with a sensor placed on goblet
- Power from a gel battery 12 V
- Work time approx 20 days
- Possibility to replace batteries (in the charger)

Application:

For use in open spaces like: parks, playgrounds

Execution variant:

For inguiry the City coat of arms can be made

No.	Part	Standard execution
1	Construction	Aluminium EN 1706
2	Sprinklers	Catalogue producer
3	Base	B - Concrete

We reserve the rights to modify the production program and the given data without separate notices due to the permanent company development

Resilient seated gate valve
flanged

PN10
PN16

SEWAGE

WATER

Gate valve 2111 DN80

Gate valve 2002 DN80

Packing cork protected against unscrewing and fully covered by additional cleaning gasket

Horizontal and vertical double spindle bearing

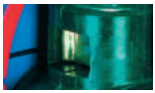

Replaceable wedge nut

Application of low friction sliding element

Product description (standard execution):

- Body bonnet and wedge made of ductile cast iron EN-GJS 400-15
- Full bore gate valve
- NBR/EPDM fully vulcanised wedge
- Application of low friction sliding element
- Wedge nut made of forged brass - replaceable
- Stainless steel spindle with rolled thread
- Low friction double spindle bearing acting both horizontal and vertical way
- O-ring spindle sealing packing cork protected against contact with medium
- Under pressure replaceable packing cork
- Forged packing cork protected against unscrewing
- Packing cork protected against dirt penetration
- Body bonnet Zinc coated screws protected by wax
- Epoxy coating minimum 250 microns according to EN 14901, GSK RAL certificate
- Product according to EN 1074-1, EN 1074-2; EN 1171
- Flange connection according to EN 1092-2; (DIN 2501) pressure PN10; PN16
- Face to face according to EN 558-A1 F5 (DIN 3202) – catalogue number 2002
- Face to face according to EN 558-A1 F4 (DIN 3202) – catalogue number 2111
- Product marking according to EN 19; EN 1074

Application:

Water and sewage networks and tanks. Transport of non agressive liquids.
Working conditions:
temp. up +70˚C
pressure up to 1,6 MPa

Execution variant:

Ductile cast iron EN-GJS 500-7
SS body and bonnet screws
With ISO top flange for actuator
With electric or pneumatic actuator - see.: 2901 2902 2903 2911
With inductive or electromechanical sensor
With opening indicator
Other material variants on request!

Test control:

Hydraulic test according to EN 1074-1; EN 1074-2; EN 12266-1
Seat: 1,1 xPN
Body: 1,5 x PN
Operation torque test.

Accessories:

Extension spindle - see: 9010, 9011
Pillar with handwheel - see: 9113
Pillar for electric actuator - see: 9114
Handwheel - see: 9301
Street box - see: 9501, 9503, 9504,9509

Installation:

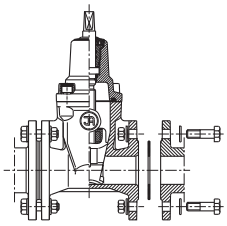

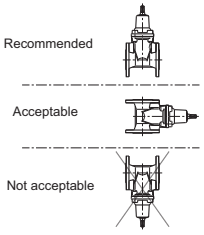

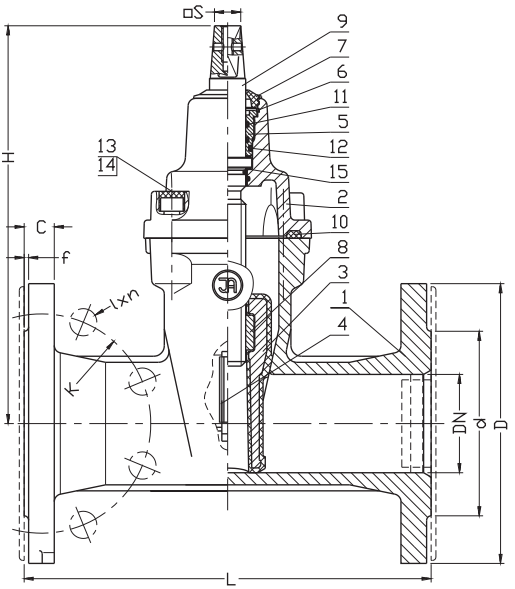

No.	Part	Standar execution
1	Body	Ductile cast iron EN-GJS-400-15 or EN-GJS-500-7 EN 1563
2	Bonnet	Ductile cast iron EN-GJS-400-15 or EN-GJS-500-7 EN 1563
3	Wedge	Brass CW617N EN 12165 (DN32) Ductile cast iron (DN40-DN350) EN-GJS-400-15 or EN-GJS-500-7 EN 1563 Rubber EPDM NBR EN ISO 1629
4	Wedge slider	Tarnoform 300 EN ISO 1874-1
5	Packing cork	Brass CW617N EN 12165
6	Protection ring	Steel 1.1260
7	Cleaning gasket	Rubber EPDM or NBR EN ISO 1629
8	Spindle nut	Brass CW617N EN 12165
9	Spindle	Stainless Steel 1.4021 EN 10088-1
10	Body-bonnet gasket	Rubber EPDM or NBR EN ISO 1629
11 12	O-ring	Rubber EPDM or NBR EN ISO 1629
13	Screw	Steel Fe/Zn5, stainless steel EN ISO 4762
14	Screw stopper	Wax
15	Washer	Tarnoform 300 EN ISO 1874-1

DN	2111 L	2002 L	H	d PN16 (PN10)	D PN16 (PN10)	K PN16 (PN10)	l PN16 (PN10)	C	f	n PN16 (PN10)	Turns for full open	S	Weight	Weight
[mm]										-		[mm]	2111 [kg]	2002 [kg]
32	130	-	145	76	140	100	19	18	3	4	9	12	5	-
40	140	240	220	84	150	110	19	19	3	4	11	14	9	10
50	150	250	230	99	165	125	19	19	3	4	13,5	14	10	11
65	170	270	265	118	185	145	19	19	3	4	14	17	14	16
80	180	280	290	132	200	160	19	19	3	8	17	17	15	17
100	190	300	325	156	220	180	19	19	3	8	21	19	21	23
125	200	325	365	184	250	210	19	19	3	8	26	19	31	39
150	210	350	457	211	285	240	23	19	3	8	26	19	41	48
200	230	400	534	266	340	295	23	20	3	12 (8)	34,5	24	62	77
250	250	450	633	319	405	355 (350)	28 (23)	22	3	12	42,5	27	94	106
300	270	500	708	370	460	410 (400)	28 (23)	25	4	12	51	27	122	148
350	290	550	790	429	520	470 (460)	28 (23)	27	4	16	60	27	216	254

We reserve the rights to modify the production program and the given data without separate notices due to the permanent company development.

Resilient seated gate valve with bypass
flanged DN400-DN600

PN10
PN16

SEWAGE

WATER

Gate valve 2111 DN600

Product description (standard execution):

- Open and close bypass pressure regulation
- Body bonnet and wedge made of ductile cast iron EN-GJS 400-15
- Full bore gate valve
- NBR/EPDM fully vulcanised wedge
- Application of low friction sliding element
- Wedge nut made of forged brass - replaceable
- Stainless steel spindle with rolled thread
- Low friction double spindle bearing acting both horizontal and vertical way
- O-ring spindle sealing packing cork protected against contact with medium
- Packing cork protected against dirt penetration
- Body bonnet Zinc coated screws protected by wax
- Epoxy coating minimum 250 microns according to EN 14901, GSK RAL certificate
- Product according to EN 1074-1, EN 1074-2; EN 1171
- Flange connection according to EN 1092-2 (DIN 2501) pressure PN10; PN16
- Face to face according to EN 558-A1 F5 (DIN 3202) – catalogue number 2002
- Face to face according to EN 558-A1 F4 (DIN 3202) – catalogue number 2111
- Product marking according to EN 19; EN 1074

Application:

Water and sewage networks and tanks. Transport of non agressive liquids.
Working conditions:
temp. up +70˚C

Execution variant:

Ductile cast iron EN-GJS 500-7
SS body and bonnet screws
With ISO top flange for actuator
With electric or pneumatic actuator - see.: 2901, 2902, 2903, 2911
With inductive or electromechanical sensor
With opening indicator
Other material variants on request!

Test control:

Hydraulic test according to EN 1074-1; EN 1074-2; EN 12266-1
Seat: 1,1 xPN
Body: 1,5 x PN
Operation torque test

Installation:

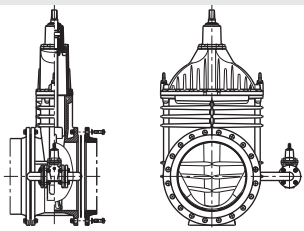

Accessories:

Extension spindle - see: 9010, 9011
Pillar with handwheel - see: 9113
Pillar for electric actuator - see: 9114
Handwheel - see: 9301
Street box - see: 9501, 9503, 9504, 9509

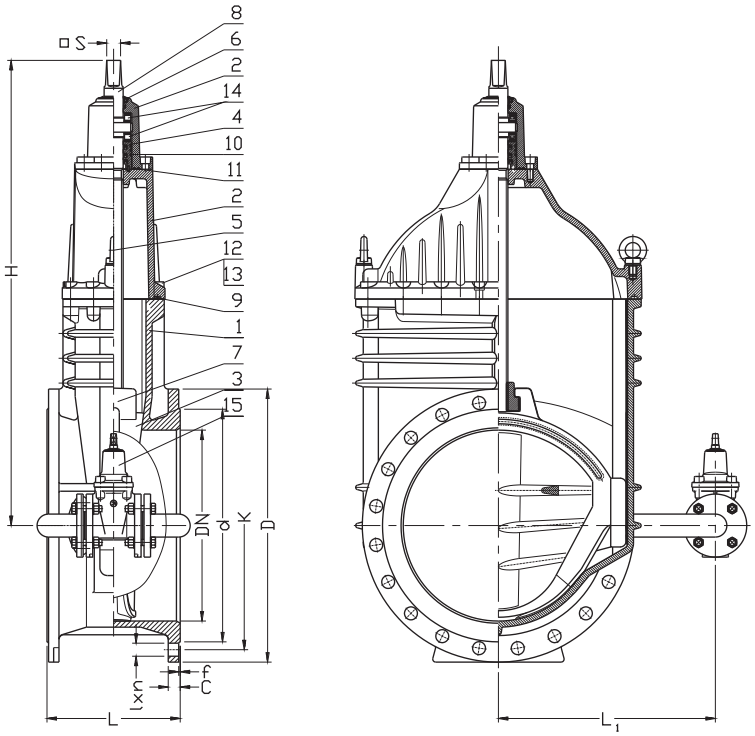

No.	Part	Standard execution	No.	Part	Standard execution
1	Body	Ductile cast iron EN-GJS-400-15 EN 1563	8	Spindle	Stainless steel 1.4021 EN 10088-1
2	Bonnet	Ductile cast iron EN-GJS-400-15 EN 1563	9	Body-bonnet gasket	Rubber EPDM EN ISO 1629
3	Wedge + slider	Ductile cast iron EN-GJS-400-15, EN 1563 Rubber EPDM, EN ISO 1629 Tarnoform 300 EN-ISO 1874-1	10-11	O-ring	Rubber EPDM EN ISO 1629
4	Packing cork	Brass CW617N EN 12165	12	Screw	Steel Fe/Zn5, Stainless steel EN ISO 4762
5	Hoisting hook	Steel Fe/Zn5 EN ISO 4017	13	Screw stopper	Wax
6	Cleaning gasket	Rubber EPDM EN ISO 1629	14	Bearing	Producer catalogue
7	Spindle nut	Brass CW617N EN 12165	15	By-pass	Gate valve Typ 2111

- other material variants on special request

DN	L 2111	L 2002	L_1	H	d PN16 (PN10)	D PN16 (PN10)	K PN16 (PN10)	l PN16 (PN10)	C	f	n PN16 (PN10)	S	Weight	Weight	By-pass
[mm]											-	[mm]	2111 [kg]	2002 [kg]	DN
400	310	600	460	1020	480	580	525 (515)	31 (28)	28	4	16	32	315	350	40
450	330	-	480	1090	548 (530)	640	585 (565)	31 (28)	30	4	20	32	365	-	40
500	350	700	510	1220	609 (582)	715 (670)	650 (620)	34 (28)	32	4	20	36	475	578	50
600	390	800	580	1390	720 (682)	840 (780)	770 (725)	37 (31)	36	5	20	36	665	800	50
600*	390	-	580	1390	794	910 (895)	840	37 (31)	36	5	24	36	695	-	50

* Flange connection EN 1092-2 for Dn700 - valve diameter DN600

We reserve the rights to modify the production program and the given data without seperate notices due to the permanent company development.

Resilient seated gate valve
flanged

PN10
PN16

SEWAGE

WATER

Gate valve 2002 DN400

Gate valve 2111 DN500

Product description (standard execution):

- Body bonnet and wedge made of ductile cast iron EN-GJS 400-15
- Full bore gate valve
- NBR/EPDM fully vulcanised wedge
- Application of low friction sliding element
- Wedge nut made of forged brass - replaceable
- Stainless steel spindle with rolled thread
- Low friction double spindle bearing acting both horizontal and vertical way
- O-ring spindle sealing packing cork protected against contact with medium
- Packing cork protected against dirt penetration
- Body bonnet Zinc coated screws protected by wax
- Epoxy coating minimum 250 microns according to EN 14901, GSK RAL certificate
- Product according to EN 1074-1, EN 1074-2; EN 1171
- Flange connection according to EN 1092-2; (DIN 2501) pressure PN10; PN16
- Face to face according to EN 558-A1 F5 (DIN 3202) – catalogue number 2002
- Face to face according to EN 558-A1 F4 (DIN 3202) – catalogue number 2111
- Product marking according to EN 19; EN 1074

Application:

Water and sewage networks and tanks. Transport of non agressive liquids.
Working conditions:
temp. up +70˚C
pressure up to 1,6 MPa

Execution variant:

Ductile cast iron EN-GJS 500-7
SS body and bonnet screws
With ISO top flange for actuator
With electric or pneumatic actuator - see.: 2901 2902 2903 2911
With inductive or electromechanical sensor
With opening indicator
Other material variants on request!

Test control:

Hydraulic test according to EN 1074-1; EN 1074-2; EN 12266-1
Seat: 1,1 xPN
Body: 1,5 x PN
Operation torque test.

Installation:

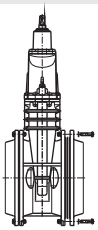

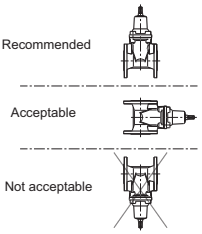

Accessories:

Extension spindle - see: 9010, 9011
Pillar with handwheel - see: 9113
Pillar for electric actuator - see: 9114
Handwheel - see: 9301
Street box - see: 9501, 9503, 9504, 9509

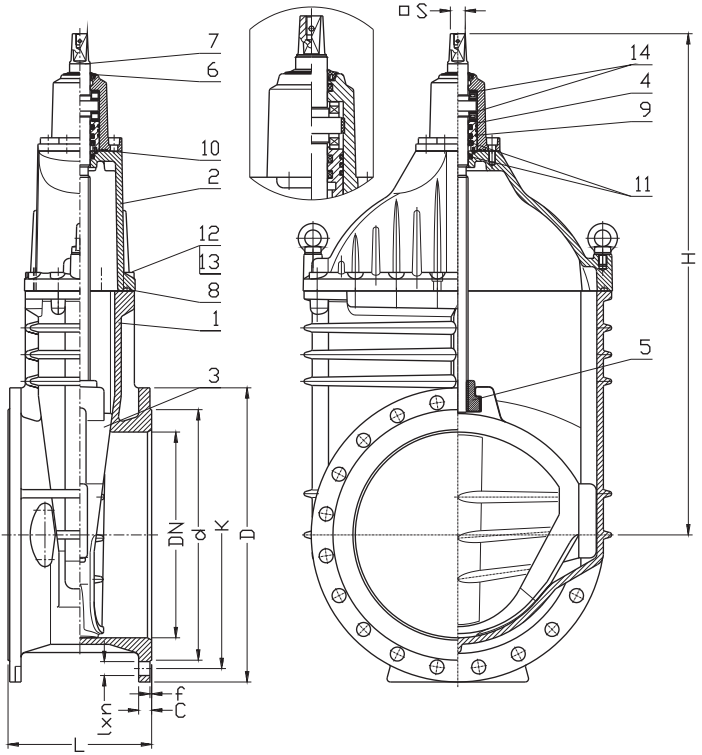

No.	Part	Material	No.	Part	Material
1	Body	Ductile cast iron EN-GJS-400-15, EN-GJS-500-7 EN 1563	7	Spindle	Steel 1.4021 EN 10088-1
2	Bonnet	Ductile cast iron EN-GJS-400-15, EN-GJS 500-7 EN 1563	8	Body -bonnet gasket	Rubber NBR, EPDM ISO 1629
3	Wedge + slider	Ductile cast iron EN-GJS-400-15, EN-GJS 500-7 EN 1563 Rubber NBR, EPDM: ISO 1629 Tarnoform 300 EN ISO 1874-1	9,10, 11	O-Ring	Rubber NBR, EPDM ISO 1629
4	Sealing sleeve	Brass CW617N EN 12165	12	Screw	Steel Fe/Zn5, stainless steel EN ISO 4762
5	Spindle nut	Brass CW617N EN 12165	13	Screw stopper	Wax
6	Cleaning gasket	Rubber NBR, EPDM ISO 1629	14	Bearing	Catalogue producer

DN	2111 L	2002 L	H	d PN16 (PN10)	D PN16 (PN10)	K PN16 (PN10)	l PN16 (PN10)	C	f	n PN16 (PN10)	Turns for full open	S	Weight	Weight
[mm]										-		[mm]	2111 [kg]	2002 [kg]
400	310	600	1020	480	580	525 (515)	31 (28)	28	4	16	58	32	298	345
450	330	-	1090	548 (530)	640	585 (565)	31 (28)	30	4	20	65	32	350	-
500	350	700	1220	609 (582)	715 (670)	650 (620)	34 (28)	32	4	20	63	36	458	540
600	390	800	1390	720 (682)	840 (780)	770 (725)	37 (31)	36	5	20	77	36	640	776
600*	430	900	1390	794	910 (895)	840	37 (31)	36	5	24	77	36	670	-

*Flange connection EN 1092-2 for DN700 - valve diameter DN600

We reserve the rights to modify the production program and the given data without separate notices due to the permanent company development.

Resilient seated gate valve
flanged DN700-DN1200

PN10
PN16

SEWAGE

WATER

Gate valve 2111 DN800

Product description (standard execution):

- Body bonnet and wedge made of ductile cast iron EN-GJS 400-15
- Full bore gate valve
- NBR/EPDM fully vulcanised wedge
- Wedge nut made of forged brass - replaceable
- Stainless steel spindle with rolled thread
- Low friction double spindle bearing acting both horizontal and vertical way
- O-ring spindle sealing packing cork protected against contact with medium
- Packing cork protected against dirt penetration
- Screws connecting the cover with the stainless steel body
- Epoxy coating minimum 250 microns according to EN 14901
- Product according to EN 1074-1, EN 1074-2; EN 1171
- Flange connection according to EN 1092-2; (DIN 2501) pressure PN10; PN16
- Face to face according to EN 558-A1 F5 (DIN 3202) – catalogue number 2002
- Face to face according to EN 558-A1 F4 (DIN 3202) – catalogue number 2111
- Product marking according to EN 19; EN 1074

Application:

Water and sewage networks and tanks. Transport of non agressive liquids.
Working conditions:
temp. up +70˚C
pressure up to 1,6 MPa

Execution variant:

Ductile cast iron EN-GJS 500-7
With ISO top flange for actuator
Other material variants on request!

Test control:

Hydraulic test according to EN 1074-1; EN 1074-2; EN 12266-1
Seat: 1,1 xPN
Body: 1,5 x PN
Operation torque test.

Accessories:

Extension spindle - see: 9010
Pillar with handwheel - see: 9113
Pillar for electric actuator - see: 9114
Street box - see: 9501, 9503, 9504, 9509

Installation:

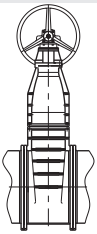

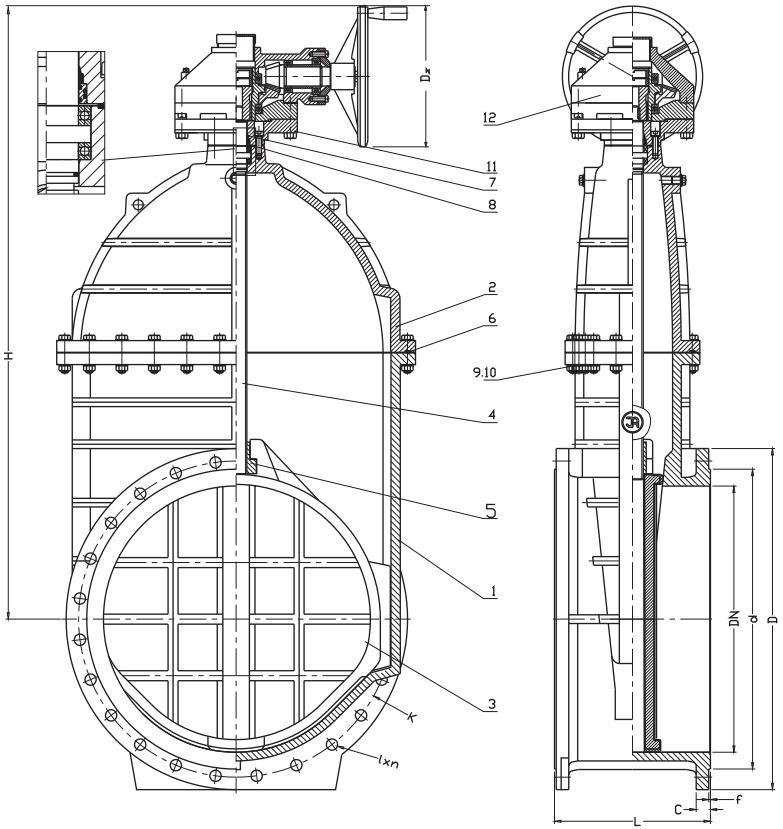

No.	Part	Material	No.	Part	Material
1	Body	Ductile cast iron EN-GJS-400-15, EN-GJS-500-7 EN 1563	7, 8	O-ring	Rubber NBR, EPDM ISO 1629
2	Bonnet	Ductile cast iron EN-GJS-400-15, EN-GJS 500-7 EN 1563	9	Screw	Stainless steel A2 EN ISO 4017
3	Wedge	Ductile cast iron EN-GJS-400-15, EN-GJS 500-7 EN 1563 Rubber NBR, EPDM ISO 1629	10	Screw stopper Washer	Stainless steel A4 EN ISO 4032 Stainless steel A2 EN ISO 7091
4	Spindle	Steel 1.4021 EN 10088-1	11	Drive connector	Ductile cast iron EN-GJS-400-15, EN-GJS-500-7 EN 1563
5	Spindle nut	BrassCW617N EN 12165	12	Gear box	Catalogue producer
6	Cleaning gasket	Rubber NBR, EPDM ISO 1629			

DN	2111 L	2002 L	H	d PN16	D PN16 (PN10)	K PN16 (PN10)	l PN16 (PN10)	n PN16 (PN10)	C	f	Turns for full open	Dz	Weight 2111	Weight 2002
[mm]											-	[mm]	[kg]	
700	430	900	1687	794	910 (895)	840	37 (31)	24	40	5	52	520	940	1060
800	470	1000	1855	901	1025 (1015)	950	40 (34)	24	43	5	52	520	1260	1420
900	510	1100	2018	1001	1125 (1115)	1050	40 (34)	28	47	5	58	520	1660	2100
1000	550	1200	2334	1112	1255 (1230)	1170 (1160)	43 (37)	28	50	5	65	600	3120	3700
1200	630	1400	2757	1328	1485 (1455)	1390 (1380)	49 (41)	32	57	5	78	600	4650	5050

We reserve the rights to modify the production program and the given data without separate notices due to the permanent company development.

Resilient seated gate valve with bypass
flanged DN700-DN1200

PN10
PN16

SEWAGE

WATER

Gate valve 2111 DN800

Product description (standard execution):

- Open and close bypass pressure regulation
- Body bonnet and wedge made of ductile cast iron EN-GJS 400-15
- Full bore gate valve
- NBR/EPDM fully vulcanised wedge
- Application of low friction sliding element
- Wedge nut made of forged brass - replaceable
- Stainless steel spindle with rolled thread
- Low friction double spindle bearing acting both horizontal and vertical way
- O-ring spindle sealing packing cork protected against contact with medium
- Packing cork protected against dirt penetration
- Body bonnet Zinc coated screws protected by wax
- Epoxy coating minimum 250 microns according to EN 14901, GSK RAL certificate
- Product according to EN 1074-1, EN 1074-2; EN 1171
- Flange connection according to EN 1092-2 (DIN 2501) pressure PN10; PN16
- Face to face according to EN 558-A1 F5 (DIN 3202) – catalogue number 2002
- Face to face according to EN 558-A1 F4 (DIN 3202) – catalogue number 2111
- Product marking according to EN 19; EN 1074

Application:

Water and sewage networks and tanks. Transport of non agressive liquids.
Working conditions:
temp. up +70˚C

Execution variant:

Ductile cast iron EN-GJS 500-7
With electric actuator

Installation:

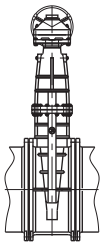

Test control:

Hydraulic test according to EN 1074-1; EN 1074-2; EN 12266-1
Seat: 1,1 xPN
Body: 1,5 x PN
Operation torque test

Accessories:

Extension spindle - see: 9010
Pillar with handwheel - see: 9113
Pillar for electric actuator - see: 9114
Street box - see: 9501, 9503, 9504, 9509

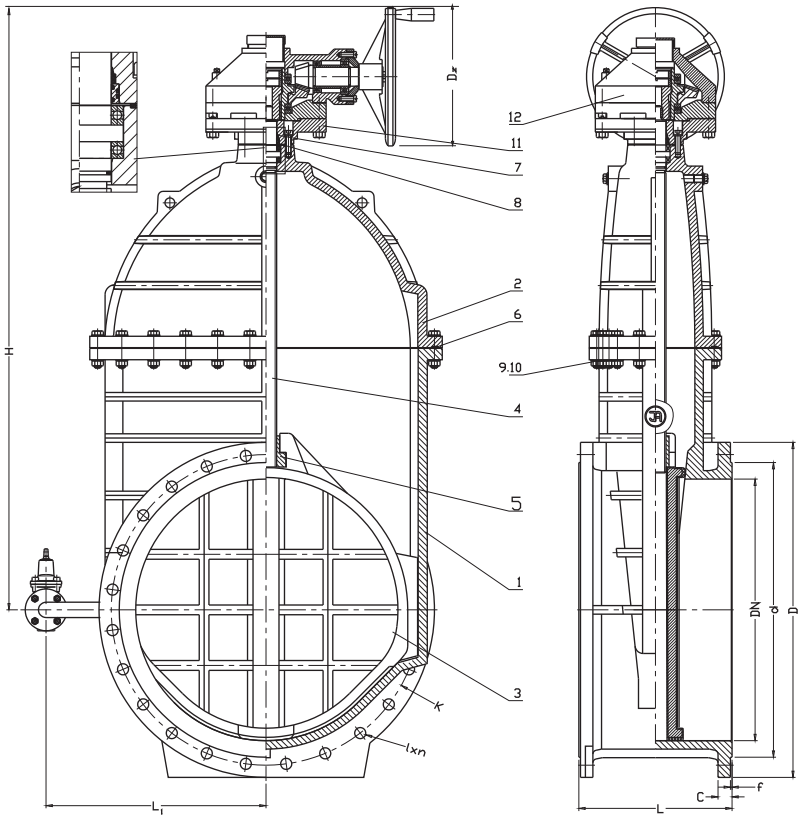

No.	Part	Material	No.	Part	Material
1	Body	Ductile cast iron EN-GJS-400-15, EN-GJS-500-7 EN 1563	7, 8	O-ring	Rubber NBR, EPDM ISO 1629
2	Bonnet	Ductile cast iron EN-GJS-400-15, EN-GJS 500-7 EN 1563	9	Screw	Stainless steel A2 EN ISO 4017
3	Wedge	Ductile cast iron EN-GJS-400-15, EN-GJS 500-7 EN 1563 Rubber NBR, EPDM ISO 1629	10	Screw stopper Washer	Stainless steel A4 EN ISO 4032 Stainless steel A2 EN ISO 7091
4	Spindle	Steel 1.4021 EN 10088-1	11	Drive connector	Ductile cast iron EN-GJS-400-15, EN-GJS-500-7 EN 1563
5	Spindle nut	BrassCW617N EN 12165	12	Gear box	Catalogue producer
6	Cleaning gasket	Rubber NBR, EPDM ISO 1629			

DN	2111 L	2002 L	L1	H	d PN16	D PN16 (PN10)	K PN16 (PN10)	l PN16 (PN10)	n PN16 (PN10)	C	f	Turn for fyll open	Dz	By-pass	Weight 2111	Weight 2002
[mm]												-	[mm]		[kg]	
700	430	900	608	1687	794	910 (895)	840	37 (31)	24	40	5	52	520	40	940	1060
800	470	1000	636	1855	901	1025 (1015)	950	40 (34)	24	43	5	52	520	50	1260	1420
900	510	1100	833	2018	1001	1125 (1115)	1050	40 (34)	28	47	5	58	520	80	1660	2100
1000	550	1200	999	2334	1112	1255 (1230)	1170 (1160)	43 (37)	28	50	5	65	600	80	3120	3700
1200	630	1400	1103	2757	1328	1485 (1455)	1390 (1380)	49 (41)	32	57	5	78	600	100	4650	5050

We reserve the rights to modify the production program and the given data without seperate notices due to the permanent company development.

Resilient seated gate valve
flanged

PN25 | SEWAGE | WATER

Gate valve 2111 DN80

Gate valve 2002 DN80

Packing cork protected against unscrewing and fully covered by additional cleaning gasket

Horizontal and vertical double spindle bearing

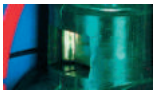

Replaceable wedge nut

Application of low friction sliding element

Product description (standard execution):

- Body bonnet and wedge made of ductile cast iron EN-GJS 400-15
- Full bore gate valve
- NBR/EPDM fully vulcanised wedge
- Application of low friction sliding element
- Wedge nut made of forged brass - replaceable
- Stainless steel spindle with rolled thread
- Low friction double spindle bearing acting both horizontal and vertical way
- O-ring spindle sealing packing cork protected against medium
- Under pressure replaceable packing cork
- Forged packing cork protected against unscrewing
- Packing cork protected against dirt penetration
- Body bonnet Zinc coated screws protected by wax
- Epoxy coating minimum 250 microns according to EN 14901, GSK RAL certificate
- Product according to EN 1074-1, EN 1074-2; EN 1171
- Flange connection according to EN 1092-2 (DIN 2501) pressure PN25
- Face to face according to EN 558-A1 F5 (DIN 3202) – catalogue number 2002
- Face to face according to EN 558-A1 F4 (DIN 3202) – catalogue number 2111
- Product marking according to EN 19; EN 1074

Application:

Water and sewage networks and tanks. Transport of non agressive liquids.
Working conditions:
temp. up +70˚C

Execution variant:

Ductile cast iron EN-GJS 500-7
SS body and bonnet screws
With ISO top flange for actuator
With electric or pneumatic actuator - see.: 2901, 2902, 2903, 2911
With inductive or electromechanical sensor
With opening indicator
Other material variants on request!

Test control:

Hydraulic test according to EN 1074-1; EN 1074-2; EN 12266-1
Seat: 1,1 xPN
Body: 1,5 x PN
Operation torque test.

Installation:

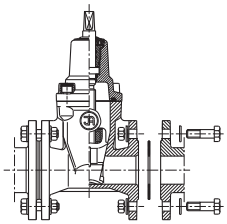

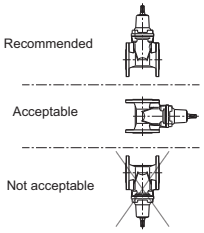

Accessories:

Extension spindle - see: 9010, 9011
Pillar with handwheel - see: 9113
Pillar for electric actuator - see: 9114
Handwheel - see: 9301
Street box - see: 9501, 9503, 9504, 9509

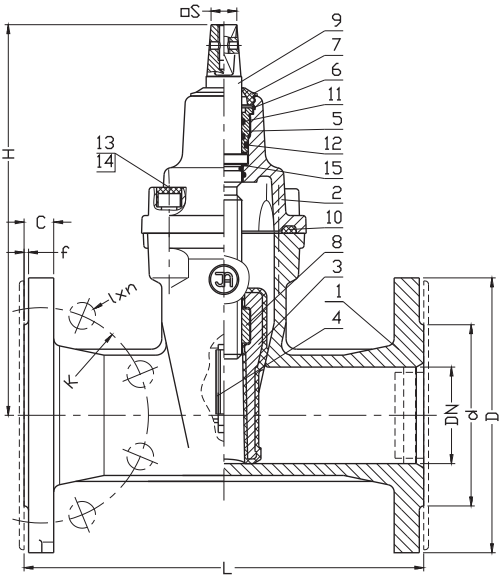

No.	Part	Standard execution
1	Body	Ductile cast iron EN-GJS-400-15 or EN-GJS-500-7 EN 1563
2	Bonnet	Ductile cast iron EN-GJS-400-15 or EN-GJS-500-7 EN 1563
3	Wedge	Brass CW617N EN 12165 (DN32) Ductile cast iron (DN40-DN600) EN-GJS-400-15 or EN-GJS-500-7 EN 1563 Rubber EPDM EN ISO 1629
4	Wedge slider	Tarnoform 300 EN-ISO 1874-1
5	Packing cork	Brass CW617N EN 12165
6	Protection ring	Steel 1.1260
7	Cleaning gasket	Rubber EPDM or NBR EN ISO 1629
8	Spindle nut	Bras CW617N EN 12165
9	Spindle	Stainless Steel 1.4021 EN 10088-1
10	Body-bonnet gasket	Rubber EPDM or NBR EN ISO 1629
11 12	O-ring	Rubber EPDM or NBR EN ISO 1629
13	Screw	Steel Fe/Zn5, stainless steel EN ISO 4762
14	Screw stopper	Wax
15	Washer	Tarnoform 300 EN-ISO 1874-1

DN	2111 L	2002 L	H	d	D	K	l	C	f	n	Turn for full open	S	Weight [kg]	
[mm]										-	[mm]	2111	2002	
32	130	-	145	76	140	100	19	19	3	4	9	12	5,3	-
40	140	240	220	84	150	110	19	19	3	4	11	14	9	10
50	150	250	230	99	165	125	19	19	3	4	13,5	14	10	10,5
65	170	270	265	118	185	145	19	19	3	8	14	17	14,5	15
80	180	280	290	132	200	160	19	19	3	8	17	17	17	19
100	190	300	325	156	235	190	23	19	3	8	21	19	24	26
125	200	325	365	184	270	220	28	19	3	8	26	19	31	36
150	210	350	457	211	300	250	28	20	3	8	26	19	44	50
200	230	400	534	274	360	310	28	22	3	12	34,5	24	63	80
250	250	450	633	330	425	370	31	25	3	12	42,5	27	100	111
300	270	500	708	389	485	430	31	28	4	16	51	27	127	162
350	290	550	790	448	555	490	34	30	4	16	60	27	230	245

We reserve the rights to modify the production program and the given data without seperate notices due to the permanent company development.

Resilient seated gate valve
flanged

PN25 | SEWAGE | WATER

Gate valve 2002 DN400

Gate valve 2111 DN500

Product description (standard execution):

- Body bonnet and wedge made of ductile cast iron EN-GJS 400-15
- Full bore gate valve
- NBR/EPDM fully vulcanised wedge
- Application of low friction sliding element
- Wedge nut made of forged brass - replaceable
- Stainless steel spindle with rolled thread
- Low friction double spindle bearing acting both horizontal and vertical way
- O-ring spindle sealing packing cork protected against medium
- Packing cork protected against dirt penetration
- Body bonnet Zinc coated screws protected by wax
- Epoxy coating minimum 250 microns according to EN 14901, GSK RAL certificate
- Product according to EN 1074-1, EN 1074-2; EN 1171
- Flange connection according to EN 1092-2 (DIN 2501) pressure PN25
- Face to face according to EN 558-A1 F5 (DIN 3202) – catalogue number 2002
- Face to face according to EN 558-A1 F4 (DIN 3202) – catalogue number 2111
- Product marking according to EN 19; EN 1074

Application:

Water and sewage networks and tanks. Transport of non agressive liquids.
Working conditions:
temp. up +70˚C

Execution variant:

Ductile cast iron EN-GJS 500-7
SS body and bonnet screws
With ISO top flange for actuator
With electric or pneumatic actuator - see.: 2901, 2902, 2903, 2911
With inductive or electromechanical sensor
With opening indicator
Other material variants on request!

Test control:

Hydraulic test according to EN 1074-1; EN 1074-2; EN 12266-1
Seat: 1,1 xPN
Body: 1,5 x PN
Operation torque test.

Installation:

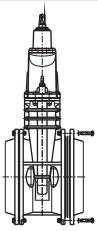

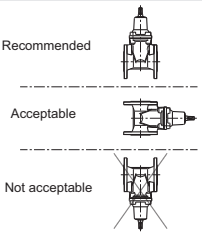

Accessories:

Extension spindle - see: 9010, 9011
Pillar with handwheel - see: 9113
Pillar for electric actuator - see: 9114
Handwheel - see: 9301
Street box - see: 9501, 9503, 9504, 9509

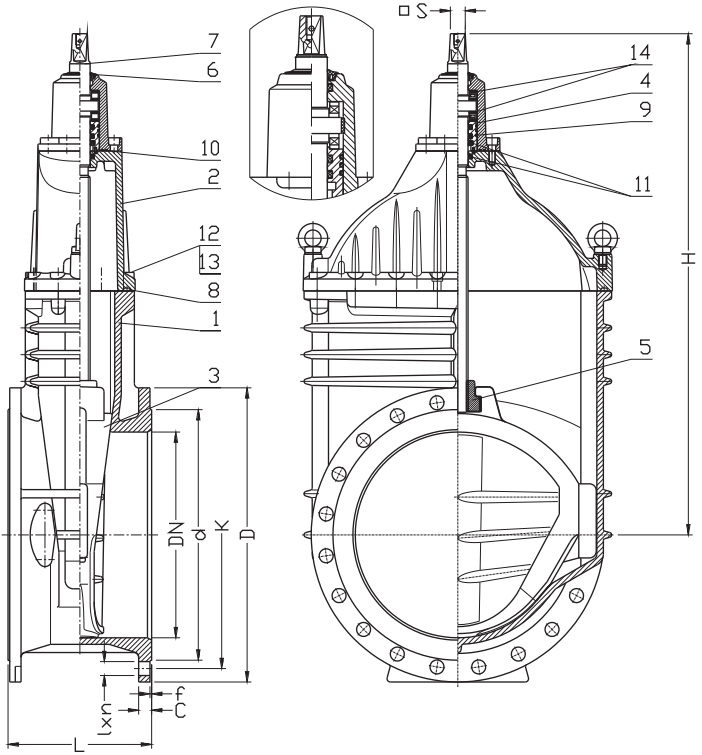

No.	Part	Material	No.	Part	Material
1	Body	Ductile cast iron EN-GJS-400-15, EN-GJS-500-7 EN 1563	7	Spindle	Steel 1.4021 EN 10088-1
2	Bonnet	Ductile cast iron EN-GJS-400-15, EN-GJS 500-7 EN 1563	8	Body-bonnet gasket	Rubber NBR, EPDM ISO 1629
3	Wedge + slider	Ductile cast iron EN-GJS-400-15, EN-GJS 500-7 EN 1563 Rubber NBR, EPDM: ISO 1629 Tarnoform 300 EN ISO 1874-1	9,10, 11	O-Ring	Rubber NBR, EPDM ISO 1629
4	Sealing sleeve	Brass CW617N EN 12165	12	Screw	Steel Fe/Zn5, stainless steel EN ISO 4762
5	Spindle nut	Brass CW617N EN 12165	13	Screw stopper	Wax
6	Cleaning gasket	Rubber NBR, EPDM ISO 1629	14	Bearing	Catalogue producer

DN	2111 L	2002 L	H	d	D	K	l	C	f	n	Turn for full open	S	Weight [kg]	
[mm]											-	[mm]	2111	2002
400	310	600	1020	503	620	550	37	32	4	16	58	32	315	343
450	330	-	1090	548	670	600	37	32	4	20	65	32	385	-
500	350	700	1220	609	730	660	37	34	4	20	63	36	480	550

We reserve the rights to modify the production program and the given data without seperate notices due to the permanent company development.

Resilient seated gate valve with technical connections flanged

PN10
PN16

SEWAGE

WATER

Gate valve DN100

Technical connectors for a multifunctional application

Horizontal and vertical double spindle bearing

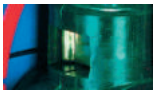

Replaceable wedge nut

Packing cork protected against unscrewing and fully covered by additional cleaning gasket

Product description (standard execution):

- Technical connectors for a multifunctional application
- Body bonnet and wedge made of ductile cast iron EN-GJS 400-15
- Full bore gate valve
- NBR/EPDM fully vulcanised wedge
- Application of low friction sliding element
- Wedge nut made of forged brass - replaceable
- Stainless steel spindle with rolled thread
- Low friction double spindle bearing acting both horizontal and vertical way
- O-ring spindle sealing packing cork protected against contact with medium
- Under pressure replaceable packing cork
- Forged packing cork protected against unscrewing
- Packing cork protected against dirt penetration
- Body bonnet Zinc coated screws protected by wax
- Epoxy coating minimum 250 microns according to EN 14901
- Product according to EN 1074-1, EN 1074-2; EN 1171
- Flange connection according to EN 1092-2; (DIN 2501) pressure PN10; PN16
- Face to face according to EN 558-A1 F5 (DIN 3202) – catalogue number 2002
- Product marking according to EN 19; EN 1074

Application:

Water and sewage networks and tanks. Transport of non agressive liquids.
Working conditions: temp. up +70˚C; pressure up to 1,6 MPa
Technical connectors allow:
- Measurement of the temperature of the flowing medium (water, sewage, etc...)
- Pressure Measurement
- Venting and dehydration of pipelines
- Medium samples collection
- Possibility of feeding disinfectants to the pipeline

Test control:

Hydraulic test according to EN 1074-1; EN 1074-2; EN 12266-1
Seat: 1,1 xPN
Body: 1,5 x PN
Operation torque test.

Accessories:

Extension spindle - see: 9010, 9011
Handwheel - see: 9301
Street box - see: 9501, 9509, 9502 (in the case of extension of technical connectors)

Execution variant:

The possibility of extending technical connections to the ground level - the required protection against freezing
Ductile cast iron EN-GJS 500-7
SS body and bonnet screws

Installation:

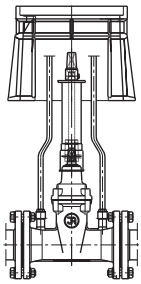

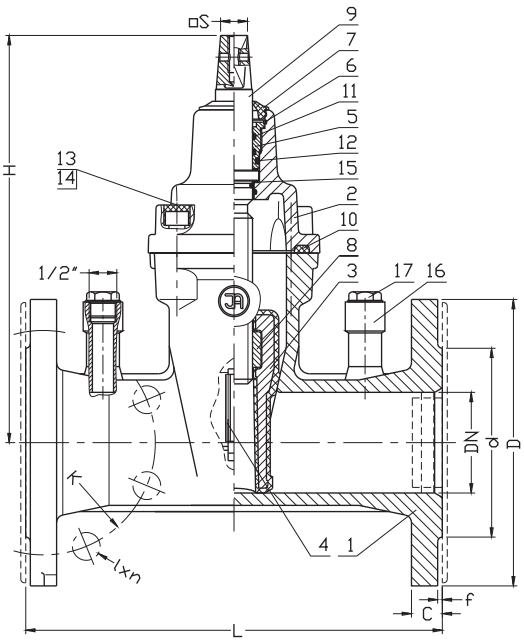

No.	Part	Standar execution
1	Body	Ductile cast iron EN-GJS-400-15 or EN-GJS-500-7 EN 1563
2	Bonnet	Ductile cast iron EN-GJS-400-15 or EN-GJS-500-7 EN 1563
3	Wedge	Ductile cast iron EN-GJS-400-15 or EN-GJS-500-7 EN 1563 Rubber EPDM NBR EN ISO 1629
4	Wedge slider	Tarnoform 300 EN ISO 1874-1
5	Packing cork	Brass CW617N EN 12165
6	Protection ring	Steel 1.1260
7	Cleaning gasket	Rubber EPDM or NBR EN ISO 1629
8	Spindle nut	Brass CW617N EN 12165
9	Spindle	Stainless Steel 1.4021 EN 10088-1
10	Body-bonnet gasket	Rubber EPDM or NBR EN ISO 1629
11 12	O-ring	Rubber EPDM or NBR EN ISO 1629
13	Screw	Steel Fe/Zn5, stainless steel EN ISO 4762
14	Screw stopper	Wax
15	Washer	Tarnoform 300 EN ISO 1874-1
16	Technical connectors	Ductile cast iron EN-GJS-400-15 or EN-GJS-500-7 EN 1563
17	Plug 1/2"	Stainless Steel 1.4301 EN 10088-1

DN	L	H	d PN16 (PN10)	D PN16 (PN10)	K PN16 (PN10)	l PN16 (PN10)	C	f	n PN16 (PN10)	Turns of full open	S	Weight
[mm]									-		[mm]	[kg]
50	250	230	99	165	125	19	19	3	4	13,5	14	11
65	270	265	118	185	145	19	19	3	4	14	17	16
80	280	290	132	200	160	19	19	3	8	17	17	17
100	300	325	156	220	180	19	19	3	8	21	19	23
125	325	365	184	250	210	19	19	3	8	26	19	39
150	350	457	211	285	240	23	19	3	8	26	19	48
200	400	534	266	340	295	23	20	3	12 (8)	34,5	24	77
250	450	633	319	405	355 (350)	28 (23)	22	3	12	42,5	27	106
300	500	708	370	460	410 (400)	28 (23)	25	4	12	51	27	148

We reserve the rights to modify the production program and the given data without separate notices due to the permanent company development.

Knife gate valve
interflange

PN10
PN16

SEWAGE

Knife gate valve DN80

Product description (standard execution):

- Bidirectional tightness
- Knife circumferential seal profile with steel insert
- Knife cleaning scrapers
- Ductile cast iron monolithic body EN-GJS 400-15
- Stainless steel 1.4021 spindle with rolled thread
- Low friction spindle bearing by plastic and brass plain washers
- Gland sealing – o-ring NBR and non-asbestos cord
- Wedge nut made of forged brass
- Epoxy coating minimum 250 microns according to EN 14901
- Stainless steel bolts and washers
- Product according to EN 1074-1, EN 1074-2; EN 1171
- Flange connection according to EN 1092-2 (DIN 2501) pressure PS2,5; PS6; PS10
- Face to face according to producer documentation
- Product marking according to EN 19; EN 1074

Application:

Water and sewage networks and tanks; pulverized products, transport of non agressive liquids.
Working conditions:
temp. up +70˚C
pressure up to 1,0 MPa

Execution variant:

Under the casing, a rising stem, not rising + linear gear
With Intersecting axis gear for >350
With deflector
With electric or pneumatic actuator - see: 2905
With inductive sensors

Test control:

Hydraulic test according to EN 1074-1; EN 1074-2; EN 12266-1
Seat: 1,1 xPN
Body: 1,5 x PN
Operation torque test.

Installation:

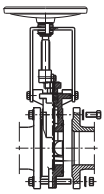

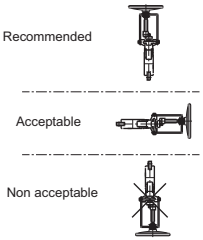

Accessories:

Extension spindle - see: 9010, 9011
Extension spindle for linear gear - see: 9025
Pillar with handwheel - see: 9113
Pillar for electric actuator - see: 9114
Street box - see: 9501

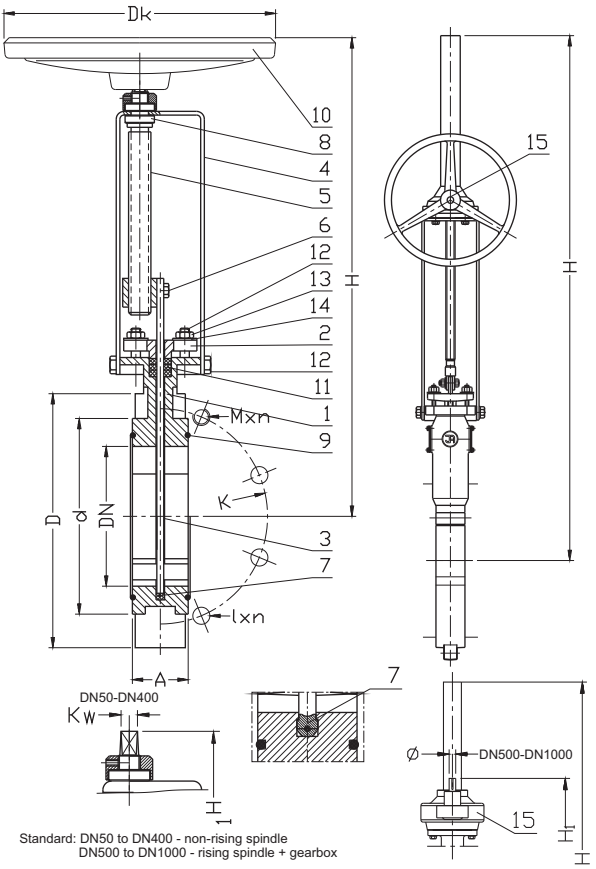

Standard: DN50 to DN400 - non-rising spindle
DN500 to DN1000 - rising spindle + gearbox

No.	Part	Standard execution
1	Body	Ductile cast iron EN-GJS-400-15 EN 1563
2	Clamping plate	Ductile cast iron EN-GJS-400-15 EN 1563
3	Knife	Stainless steel 1.4301, 1.4571* EN 10088-1
4	Pillar	Steel 1.0038 EN 10025-2
5	Spindle	Stainless steel 1.4021, 1.4301* EN 10088-1
6	Spindle nut	Brass CW617N EN 12165
7	Gasket	Rubber NBR EN ISO 1629
8	Sliding bushing	Polyamide EN 1871-1 Brass EN 1982
9	Seal o-ring	Rubber NBR EN ISO 1629
10	Handwheel	Grey iron EN-GJL-250 EN 1561
11	Gland seal	PACKAGE; Rubber NBR, EN ISO 1629 with non-asbestos cord
12	Screw	Stainless steel A2 EN ISO 4014
13	Nut	Stainless steel A4 EN ISO 4032
14	Washer	Stainless steel A2 EN ISO 7091
15	Gearbox	Producer catalogue

* - material version on enquiry

DN	PN	PS	K	D	d	Kw/Ø	l x n	M x n	A wg. rys.	H	H1	Dk	Kv	Number of turns to open	Weight
[mm]	[bar]		[mm]										[m^3/h]		[kg]
50	10-16	10	125	165	99	Kw12	-	M16x4	48	286	281	200	206	14	8
65	10-16	10	145	185	118	Kw12	-	M16x4	48	317	315	200	309	18	10
80	10-16	10	160	200	132	Kw14	Ø19x6	M16x2	52	335	333	200	494	22	11
100	10-16	10	180	220	156	Kw14	Ø19x6	M16x2	52	370	363	250	927	27	13
125	10-16	10	210	250	184	Kw14	Ø19x6	M16x2	56	420	420	250	1545	33	18
150	10-16	10	240	285	212	Kw17	Ø23x6	M20x2	56	494	487	250	2060	32	21
200	10	10	295	340	266	Kw17	Ø23x6	M20x2	70	575	568	320	4017	42	38
250	10	10	350	395	319	Kw17	Ø23x8	M20x4	70	680	674	320	5665	52	52
300	10	10	400	445	370	Kw17	Ø23x8	M20x4	76	794	780	320	8755	62	63
350	10	10	460	505	430	Kw19	Ø23x10	M20x6	76	890	840	320	11640	72	83
400	10	10	515	565	480	Kw24	Ø28x10	M24x6	86	990	980	450	15520	68	98
500	10	6	620	670	582	Ø30	Ø28x12	M24x8	114	1820	/1440/1280	630	22310	85	232
600	10	6	725	780	682	Ø30	Ø31x12	M27x8	114	2050	/1680/	630	33950	102	282
700	10	2,5	840	910	794	Ø30	Ø31x14	M27x10	165	2480	/1970/	630	48500	118	554
800	10	2,5	950	1015	901	Ø30	Ø34x14	M30x10	190	2800	/2240/	630	58200	116	680
900	10	2,5	1050	1115	1001	Ø30	Ø34x16	M30x12	203	3070	/2420/	815	77600	115	850
1000	10	2,5	1160	1230	1112	Ø30	Ø37x16	M33x12	216	3430	/2550/	815	97000	127	1150

We reserve the rights to modify the production program and the given data without separate notices due to the permanent company development.

Knife gate valve for underground instalations
interflange

PN10
PN16

SEWAGE

Knife gate valve DN80

Product description (standard execution):

- Bidirectional tightness
- Knife circumferential seal profile with steel insert
- Knife cleaning scrapers
- Ductile cast iron monolithic body EN-GJS 400-15
- Stainless steel 1.4021 spindle with rolled thread
- Low friction spindle bearing by plastic and brass plain washers
- Total protection against outside dirt penetration
- Gland sealing – o-ring NBR and non-asbestos cord
- Wedge nut made of forged brass
- Epoxy coating minimum 250 microns according to EN 14901
- Stainless steel bolts and washers
- Product according to EN 1074-1, EN 1074-2; EN 1171
- Flange connection according to EN 1092-2 (DIN 2501) pressure PS2,5; PS6; PS10
- Face to face according to producer documentation
- Product marking according to EN 19; EN 1074

Application:

Water and sewage networks and tanks; pulverized products, transport of non agressive liquids.
Working conditions:
temp. up +70˚C
pressure up to 1,0 MPa

Execution variant:

With non-rising and rising spindle + linear gear for >DN350
With deflector
With electric actuators - see: 2906

Test control:

Hydraulic test according to EN 1074-1; EN 1074-2; EN 12266-1
Seat: 1,1 xPN
Body: 1,5 x PN
Operation torque test.

Installation:

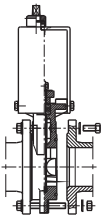

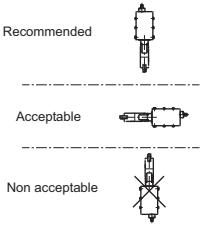

Accessories:

Extension spindle - see: 9010, 9011
Extension spindle for linear gear - see: 9025
Pillar with handwheel - see: 9113
Pillar for electric actuator - see: 9114
Handwheel - see: 9301
Street box - see: 9501

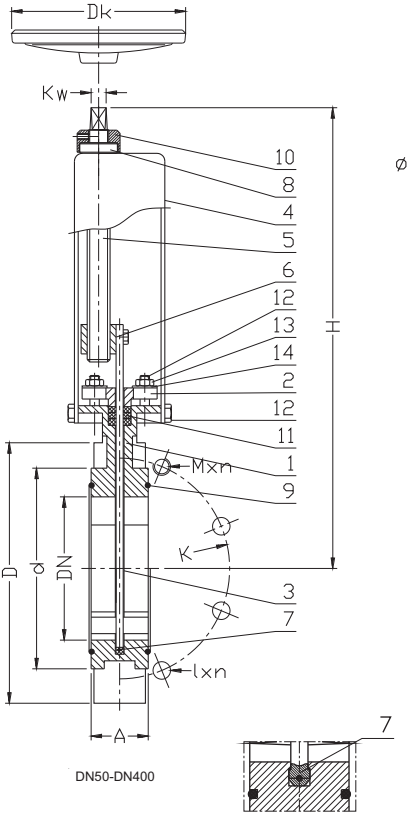

DN50-DN400

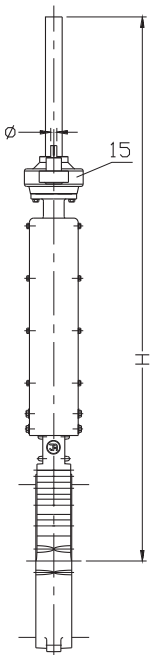

DN500-DN1000

Standard: DN50 to DN400 - non-rising spindle
DN500 to DN1000 - rising spindle + linear gear

No.	Part	Standard execution
1	Body	Ductile cast iron EN-GJS-400-15 EN 1563
2	Clamping plate	Ductile cast iron EN-GJS-400-15 EN 1563
3	Knife	Stainless steel 1.4301, 1.4571* EN 10088-1
4	Pillar	Steel 1.0038 EN 10025-2
5	Spindle	Stainless steel 1.4021, 1.4301* EN 10088-1
6	Spindle nut	Brass CW617N EN 12165
7	Gasket	Rubber NBR EN ISO 1629
8	Sliding bushing	Polyamide EN 1871-1 Brass EN 1982
9	Seal o-ring	Rubber NBR EN ISO 1629
10	Cover sleeve	Stainless steel 1.4021 EN 10088-1
11	Gland seal	PACKAGE; Rubber NBR, EN ISO 1629 with non-asbestos cord
12	Screw	Stainless steel A2 EN ISO 4014
13	Nut	Stainless steel A4 EN ISO 4032
14	Washer	Stainless steel A2 EN ISO 7091
15	Gearbox	Producer catalogue

* - material version on enquiry

DN	PN	PS	K	D	d	Kw/Ø	l x n	M x n	A by drawing	Dk	H non-rising spindle (rising)	Turns for full open	Weight
[mm]	[bar]		[mm]										[kg]
50	10-16	10	125	165	99	Kw 12	-	M16x4	48	200	281	14	10
65	10-16	10	145	185	118	Kw 12	-	M16x4	48	200	315	18	12
80	10-16	10	160	200	132	Kw 14	Ø19x6	M16x2	52	200	333	22	13
100	10-16	10	180	220	156	Kw 14	Ø19x6	M16x2	52	250	363	27	16
125	10-16	10	210	250	184	Kw 14	Ø19x6	M16x2	56	250	420	33	22
150	10-16	10	240	285	212	Kw 17	Ø23x6	M20x2	56	250	487	32	27
200	10	10	295	340	266	Kw 17	Ø23x6	M20x2	70	320	568	42	47
250	10	10	350	395	319	Kw 17	Ø23x8	M20x4	70	320	674	52	60
300	10	10	400	445	370	Kw 17	Ø23x8	M20x4	76	320	780	62	74
350	10	10	460	505	430	Kw 19	Ø23x10	M20x6	76	320	840	72	90
400	10	10	515	565	480	Kw 24	Ø28x10	M24x6	86	450	980	68	106
500	10	6	620	670	582	Ø30	Ø28x12	M24x8	114	630	(1820)1300	85	252
600	10	6	725	780	682	Ø30	Ø31x12	M27x8	114	630	(2130)1480	102	300
700	10	2,5	840	910	794	Ø30	Ø31x14	M27x10	165	630	(2495)	118	569
800	10	2,5	950	1015	901	Ø30	Ø34x14	M30x10	190	630	(2850)	116	696
900	10	2,5	1050	1115	1001	Ø30	Ø34x16	M30x12	203	815	(3160)	115	868
1000	10	2,5	1160	1230	1112	Ø30	Ø37x16	M33x12	216	815	(3428)	127	1175

We reserve the rights to modify the production program and the given data without separate notices due to the permanent company development.

Metal seated gate valve
flanged

PN10
PN16

INDUSTRY

Gate valve 2109 DN200

Gate valve 2909 DN500

Product description (standard execution):

- Body and wedge face seal rings made of bronze or stainless steel
- Graphite or PTFE + graphite packing gland of spindle
- Wedge nut made of bronze or ductile cast iron - replaceable
- Non rising stainless steel spindle with rolled thread
- Body bonnet and wedge made of ductile cast iron EN-GJS 400-15
- Non-asbestos body bonnet gasket - flat
- Packing cork protected against dirt penetration
- Body bonnet Zinc coated screws
- Polyvinyl coating minimum 100 microns according to EN 14901
- Product according to EN 1171
- Flange connection according to EN 1092-2 (DIN 2501) pressure PN10; PN16
- Face to face according to EN 558-A1 row14 F4 (DIN 3202)
- Product marking according to EN 19; EN 1171

Application:

Industrial water, water and air networks and tanks; heating installations, petroleum compounds and other inert liquids.
Working conditions:
temp. up +120˚C (bronze rings), +150˚C (stainless steel rings)
pressure up to 1,6 MPa

Execution variant:

Ductile cast iron EN-GJS 500-7
With SS body bonnet screws
For actuator
With electric or pneumatic actuators - see: 2909
With inductive or electromechanical sensors
With opening indicator

Test control:

Water pressure test according to EN 1074-1; EN 1074-2;
EN 12266-1
Seat: 1,1 xPN
Body: 1,5 x PN
Air pressure test according to EN 12266-1
Seat: 1,1 x PN;
Body: 1,1 x PN
Operation torque test

Installation:

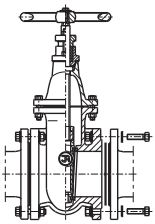

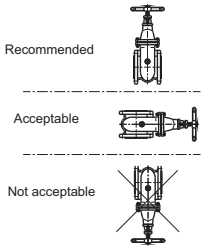

Accessories:

Extension spindle - see: 9010, 9011
Pillar with handwheel - see: 9113
Pillar for electric actuator - see: 9114
Handwheel - see: 9301
Street box - see: 9501,9503, 9509

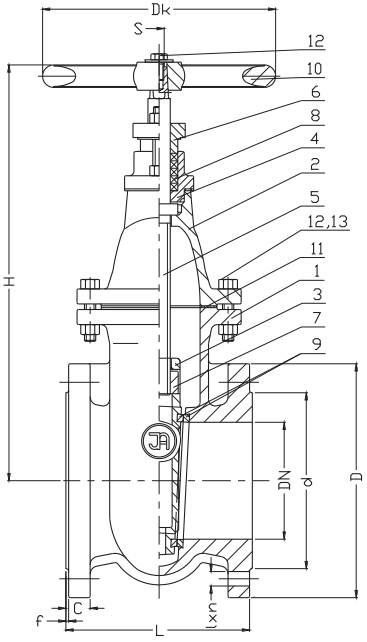

No.	Part	Standard execution
1	Body	Ductile cast iron EN-GJS-400-15 EN-GJS-500-7 EN 1563
2	Bonnet	Ductile cast iron EN-GJS-400-15 EN-GJS-500-7 EN 1563
3	Wedge	Ductile cast iron EN-GJS-400-15 EN-GJS-500-7 EN 1563
4	Gland	Ductile cast iron EN-GJS-400-15 EN-GJS-500-7 EN 1563
5	Spindle	Stainless steel 1.4021 DN40-600 EN 10088-1
6	Clamping plate	Ductile cast iron EN-GJS-400-15 EN-GJS-500-7 EN 1563
7	Spindle nut	Ductile cast iron EN-GJS-400-15 EN 1563 Bronze EN 1982
8	Gland seal	Graphite - DN40-300; Graphite or PTFE - DN350-600
9	Ring	Stainless steel 1.4021 EN 10088-1 Bronze EN 1982
10	Handwheel	Grey iron EN-GJL-250 EN 1561
11	Body-bonnet gasket	Non-asbestos gasket Graphite - DN40-300 AF300 - DN350-600
12	Screw	Steel 1.0038 DN40-300 Fe/Zn5 DN 350-600 EN ISO 4017
13	Nut	Steel 1.0038 DN40-300 Fe/Zn5 DN350-600 EN ISO 4027

- other material variants on special request

Product version:
For actuator 2109

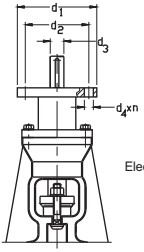

Electric actuator 2909 for DN ⩾ 350

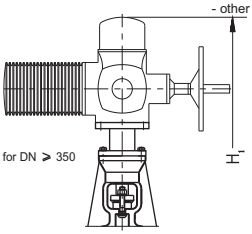

Seal	120°C	150°C
Bronze ring	PS10/16	
Steel ring	PS10/16	PS10

DN	PN	L	H	H1	d PN16 (PN10)	D PN16 (PN10)	K PN16 (PN10)	C	f	l PN16 (PN10)	n	d1	d2	d3	d4	Dk	S	LH thread	Actuator	Turns for full open
[mm]	[bar]	[mm]									-	[mm]								
40	PN10/16	140	245	no option	84	150	110	19	3	19	4	no option				160	12	Tr12X3	no option	15
50		150	255		99	165	125	19	3	19	4					160	12	Tr12X3		18
65		170	277		118	185	145	19	3	19	4					160	12	Tr16X4		20
80		180	303		132	200	160	19	3	19	8					160	12	Tr16X4		26
100		190	340		156	220	180	19	3	19	8					200	14	Tr20X4		30
125		200	387		184	250	210	19	3	19	8					200	14	Tr20X4		29
150		210	454		211	285	240	19	3	23	8					200	14	Tr22X5		36
200		230	538		266	340	295	20	3	23	12(8)					250	19	Tr22X5		46
250		250	629		319	405 (395)	355 (350)	22	3	28 (23)	12					250	19	Tr26X5		48
300		270	730		370	460 (445)	410 (400)	25	4	28 (23)	12					320	24	Tr28X5		57
350		290	860	1033	429	520 (505)	470 (460)	27	4	28 (23)	16	175	140	30	18x4	320	-	Tr32X6	SA 14.2 F14	65
400		310	935	1370	480	580 (565)	525 (515)	28	4	31 (28)	16					320	-	Tr32X6	SA 14.6 F14	74
500		350	1135	1555	609 (582)	715 (670)	650 (620)	32	4	34 (28)	20					630	-	Tr40X6		91
600		390	1305	1650	720 (682)	840 (780)	770 (725)	36	5	37 (31)	20					630	-	Tr40X6		108

We reserve the rights to modify the production program and the given data without separate notices due to the permanent company development.

Metal seated gate valve
flanged

PN10
PN16

INDUSTRY

Gate valve 2110 DN80

Product description (standard execution):

- Body and wedge face seal rings made of brass
- Wedge nut made of forged brass - replaceable
- Under pressure replaceable packing cork
- Stainless steel spindle with rolledt hread
- Low friction double spindle bearing acting both horizontal and vertical way
- O-ring spindle sealing, packing cork protected against medium
- Forged packing cork protected against unscrewing
- Body bonnet and wedge made of ductile cast iron
- Packing cork protected against dirt penetration
- Polyvinyl coating minimum 100 microns according to EN 14901
- Product according to EN 1171
- Flange connection according to EN 1092-2 (DIN 2501) pressure PN10; PN16
- Face to face according to EN 558-A1 row 14 F4 (DIN 3202)
- Product marking according to EN 19; EN 1171

Application:

Industrial water, water and air networks and tanks; heating installations and other inert liquids.
Working conditions:
temp. up +120˚C
pressure up to 1,6 MPa

Execution variant:

With SS body bonnet screws
For actuator
With electric or pneumatic actuators - see: 2910
With inductive or electromechanical sensors
With opening indicator

Test control:

Water pressure test according to EN 1074; EN 1074-2;
EN 12266-1
Seat: 1,1 xPN
Body: 1,5 x PN
Operation torque test

Installation:

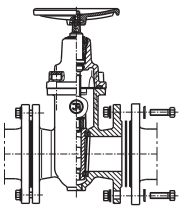

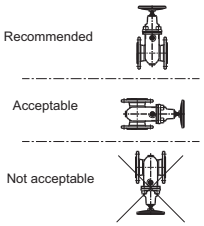

Accessories:

Extension spindle - see: 9010, 9011
Pillar with handwheel - see: 9113
Pillar for electric actuator - see: 9114
Handwheel - see: 9301
Street box - see: 9501,9503, 9509

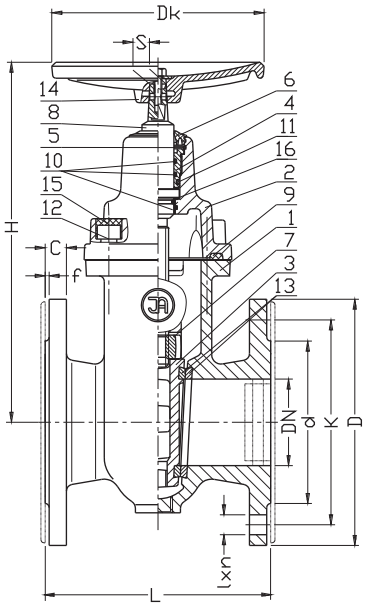

No.	Part	Standard execution
1	Body	Ductile cast iron EN-GJS 400-15, EN 1563
2	Bonnet	Ductile cast iron EN-GJS 400-15, EN 1563
3	Wedge	Ductile cast iron EN-GJS 400-15, EN 1563
4	Packing cork	Brass CW617N EN 12165
5	Protection ring	Steel 1.1260
6	Cleaning gasket	Rubber EPDM EN ISO 1629
7	Spindle nut	Brass CW617N (*) EN 12165
8	Spindle	Stainless steel 1.4301 EN 10088-1
9	Body-bonnet gasket	Rubber EPDM EN ISO 1629
10 11	O-ring	Rubber EPDM EN ISO 1629
12	Screw	Steel Zn/Fe5 EN ISO 4762
13	Ring	Brass CW617N (*) EN 12165
14	Handwheel	Grey iron EN-GJL-250 EN 1561
15	Screw stoper	Wax
16	Washer	Tarnoform 300 EN ISO 1874-1

Product version:
For actuator 2110

Electric actuator 2910

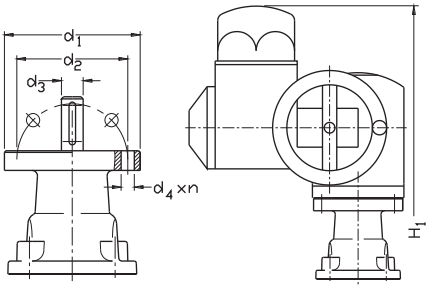

DN	PN	L	H	H1	d	D PN16/PN(10)	K PN16/(PN10)	C	f	l PN16/(PN10)	n	d1	d2	d3	d4	S	Dk	LH thread	Actuator	Turns for full open	Weight
[mm]	[bar]	[mm]														[mm]			-	-	[kg]
40	10-16	140	230	461	84	150	110	19	3	19	4	90	70	20	9x4	14	200	Tr16x4	SA 7.6 F7	15	11
50	10-16	150	250	481	99	165	125	19	3	19	4	90	70	20	9x4	14	200	Tr16x4		18	13
65	10-16	170	280	507	118	185	145	19	3	19	4	125	102	20	11x4	17	200	Tr16x4		20	18
80	10-16	180	310	530	132	200	160	19	3	19	8	125	102	20	11x4	17	200	Tr16x4		26	21
100	10-16	190	350	563	156	220	180	19	3	19	8	125	102	20	11x4	19	250	Tr20x4	SA 10.2 F10	30	30
125	10-16	200	395	604	184	250	210	19	3	19	8	125	102	20	11x4	19	250	Tr24x5		29	42
150	10-16	210	450	675	211	285	240	19	3	23	8	125	102	20	11x4	19	250	Tr24x5		36	54
200	10-16	230	510	750	266	340	295	20	3	23	12(8)	125	102	20	11x4	24	320	Tr24x5		46	80
250	10-16	250	625	875	319	405(395)	355(350)	22	3	28(23)	12	175	140	30	18x4	27	320	Tr32x6	SA 14.2 F14	48	98
300	10-16	270	710	950	370	460(445)	410(400)	25	4	28(23)	12	175	140	30	18x4	27	320	Tr32x6		57	130

We reserve the rights to modify the production program and the given data without separate notices due to the permanent company development.

Resilient seated gate valve BS5163
flanged

PN10
PN16

SEWAGE

WATER

Gate valve 2112 DN65

Packing cork protected against unscrewing and fully covered by additional cleaning gasket

Horizontal and vertical double spindle bearing

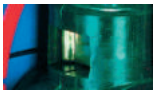

Replaceable wedge nut

Application of low friction sliding element

Product description (standard execution):

- Body bonnet and wedge made of ductile cast iron EN-GJS 400-15
- Full bore gate valve
- NBR/EPDM fully vulcanised wedge
- Wedge nut made of forged brass - replaceable
- Application of low friction sliding element
- Stainless steel spindle with rolled thread
- Low friction double spindle bearing acting both horizontal and vertical way
- O-ring spindle sealing packing cork protected against contact with medium
- Under pressure replaceable packing cork
- Forged packing cork protected against unscrewing
- Packing cork protected against dirt penetration
- Body bonnet Zinc coated screws protected by wax
- Epoxy coating minimum 250 microns according to EN 14901, GSK RAL certificate
- Product according to EN 1074-1,EN 1074-2 EN 1171
- Flange connection according to EN 1092-2 (DIN 2501) pressure PN10; PN16
- Face to face according to BS 5163-1
- Product marking according to EN 19; EN 1074

Application:

Water and sewage networks and tanks. Transport of non agressive liquids.
Working conditions:
temp. up +70˚C

Execution variant:

Ductile cast iron EN-GJS 500-7
SS body and bonnet screws
With ISO top flange for actuator
With electric or pneumatic actuator - see.: 2901, 2902, 2903, 2911
With inductive or electromechanical sensor
With opening indicator
Other material variants on request!

Test control:

Hydraulic test according to EN 1074-1; EN 1074-2; EN 12266-1
Seat: 1,1 xPN
Body: 1,5 x PN
Operation torque test.

Accessories:

Extension spindle - see: 9010, 9011
Pillar with handwheel - see: 9113
Pillar for electric actuator - see: 9114
Handwheel - see: 9301
Street box - see: 9501, 9503, 9504, 9509

Installation:

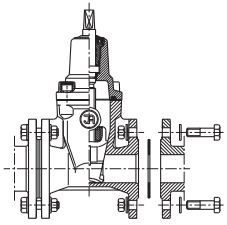

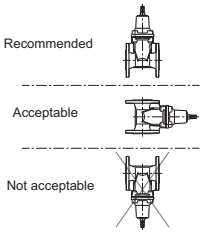

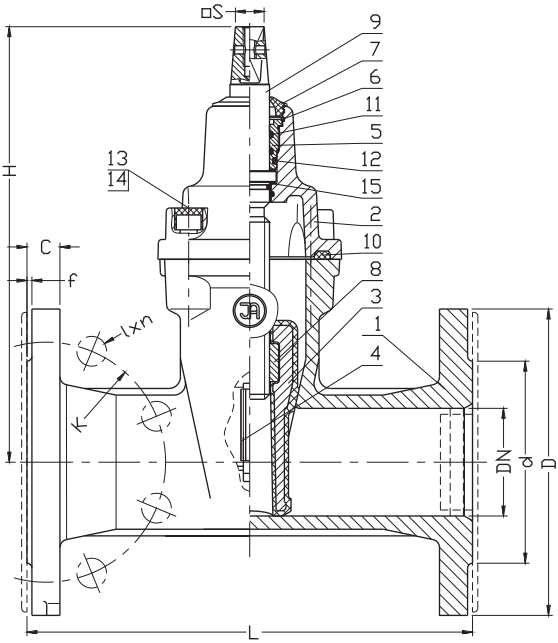

No.	Part	Standar execution
1	Body	Ductile cast iron EN-GJS-400-15 EN 1563
2	Bonnet	Ductile cast iron EN-GJS-400-15 EN 1563
3	Wedge	Ductile cast iron EN-GJS-400-15 EN 1563 Rubber EPDM EN ISO 1629
4	Wedge slider	Tarnoform 300 EN-ISO 1874-1
5	Packing cork	Brass CW617N EN 1982
6	Protection ring	Steel 1.1260 74/H-84032
7	Cleaning gasket	Rubber EPDM or NBR EN ISO 1629
8	Spindle nut	Brass CW617N EN 1982
9	Spindle	Stainless Steel 1.4021 EN 10088-1
10	Body-bonnet gasket	Rubber EPDM or NBR EN ISO 1629
11 12	O-ring	Rubber EPDM or NBR EN ISO 1629
13	Screw	Steel Fe/Zn5, stainless steel Acc. to EN ISO 4762
14	Screw stopper	Wax
15	Washer	Tarnoform 300 EN ISO 1874-1

DN	L	H	d	D	K PN16 (PN10)	l PN16 (PN10)	C	f	n PN16 (PN10)	S	Turn for full open	Weight
[mm]									-	[mm]		[kg]
40	165	220	84	150	110	19	16	3	4	14	11	8,5
50	178	230	99	165	125	19	19	3	4	14	13,5	10,5
65	190	265	118	185	145	19	19	3	4	17	14	15
80	203	290	132	200	160	19	19	3	8	17	17	19,5
100	229	325	156	220	180	19	19	3	8	19	23	26
125	254	365	184	250	210	19	19	3	8	19	26	33,5
150	267	457	211	285	240	23	20	3	8	19	30,5	48,2
200	292	534	266	340	295	23	22	3	12 (8)	24	34,5	73,3
250	330	633	319	405	355 (350)	28 (23)	25	3	12	27	42,5	97
300	356	708	370	460	410 (400)	28 (23)	27	4	12	27	51	134,5

We reserve the rights to modify the production program and the given data without seperate notices due to the permanent company development.

Resilient seated gate valve BS5163
flanged

PN10
PN16

SEWAGE

WATER

Gate valve 2112 DN400

Product description (standard execution):

- Body bonnet and wedge made of ductile cast iron EN-GJS 400-15
- Full bore gate valve
- NBR/EPDM fully vulcanised wedge
- Wedge nut made of forged brass - replaceable
- Application of low friction sliding element
- Stainless steel spindle with rolled thread
- Low friction double spindle bearing acting both horizontal and vertical way
- O-ring spindle sealing packing cork protected against contact with medium
- Packing cork protected against dirt penetration
- Body bonnet Zinc coated screws protected by wax
- Epoxy coating minimum 250 microns according to EN 14901, GSK RAL certificate
- Product according to EN 1074-1, EN 1074-2, EN 1171
- Flange connection according to EN 1092-2 (DIN 2501) pressure PN10; PN16
- Face to face according to BS 5163-1
- Product marking according to EN 19; EN 1074

Application:

Water and sewage networks and tanks. Transport of non agressive liquids.
Working conditions:
temp. up +70˚C

Execution variant:

Ductile cast iron EN-GJS 500-7
SS body and bonnet screws
With ISO top flange for actuator
With electric or pneumatic actuator - see.: 2901, 2902, 2903, 2911
With inductive or electromechanical sensor
With opening indicator
Other material variants on request!

Test control:

Hydraulic test according to EN 1074-1; EN 1074-2; EN 12266-1
Seat: 1,1 xPN
Body: 1,5 x PN
Operation torque test.

Installation:

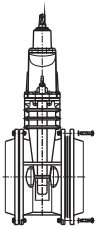

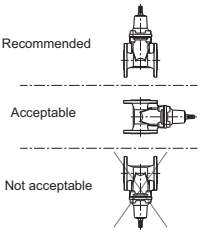

Accessories:

Extension spindle - see: 9010, 9011
Pillar with handwheel - see: 9113
Pillar for electric actuator - see: 9114
Handwheel - see: 9301
Street box - see: 9501,9503, 9504, 9509

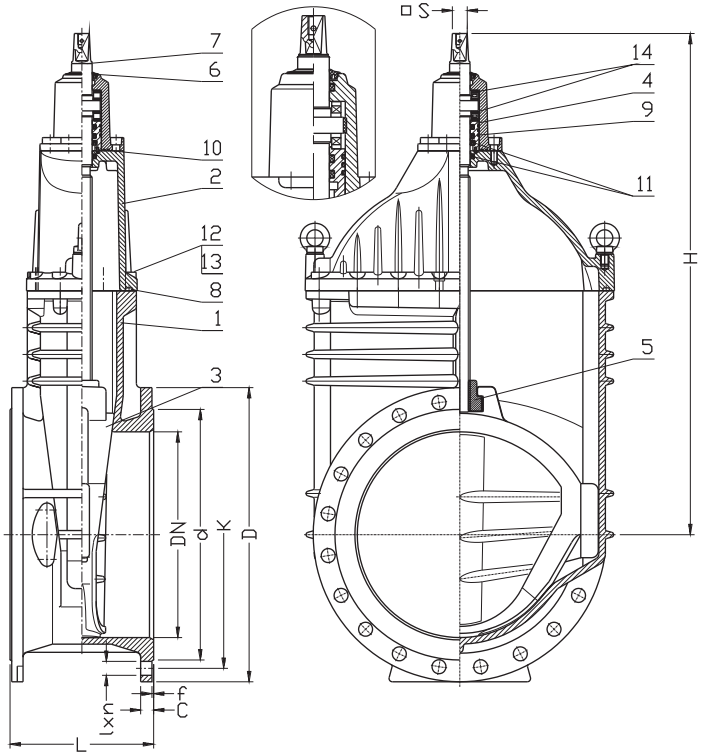

No.	Part	Material	No.	Part	Material
1	Body	Ductile cast iron EN-GJS-400-15, EN-GJS-500-7 EN 1563	7	Spindle	Steel 1.4021 EN 10088-1
2	Bonnet	Ductile cast iron EN-GJS-400-15, EN-GJS 500-7 EN 1563	8	Body -bonnet gasket	Rubber NBR, EPDM ISO 1629
3	Wedge + slider	Ductile cast iron EN-GJS-400-15, EN-GJS 500-7 EN 1563 Rubber NBR, EPDM: ISO 1629 Tarnoform 300 EN ISO 1874-1	9,10, 11	O-Ring	Rubber NBR, EPDM ISO 1629
4	Sealing sleeve	Brass CW617N EN 12165	12	Screw	Steel Fe/Zn5, stainless steel EN ISO 4762
5	Spindle nut	Brass CW617N EN 12165	13	Screw stopper	Wax
6	Cleaning gasket	Rubber NBR, EPDM ISO 1629	14	Bearing	Catalogue producer

DN	L	H	d PN16 (PN10)	D PN16 (PN10)	K PN16 (PN10)	l PN16 (PN10)	C	f	n PN16 (PN10)	S	Turn for full open	Weight
[mm]									-	[mm]		[kg]
400	406	1020	480	580	525 (515)	31 (28)	28	4	16	32	58	320
500	457	1220	609 (582)	715 (670)	650 (620)	34 (28)	32	4	20	36	63	490
600	508	1390	720 (682)	840 (780)	770 (725)	37 (31)	36	5	20	36	77	685

We reserve the rights to modify the production program and the given data without seperate notices due to the permanent company development.

Metal seated gate valve
flanged

PN10
PN16

INDUSTRY

Gate valve DN200

Product description (standard execution):

- Body and wedge face seal rings made of stainless steel or bronze*
- Graphite or PTFE + graphite packing gland of spindle
- Stainless steel spindle with rolled thread - rising
- Body, bonnet and wedge made of ductile cast iron EN-GJS 400-15
- Non-asbestos body bonnet gasket, graphite or AF300 - flat
- Body bonnet Zinc coated screws
- Polyvinyl coating minimum 100 microns according to EN 14901
- Product according to EN 1171
- Flange connection according to EN 1092-2 (DIN 2501) pressure PN10; PN16
- Face to face according to EN 558-A1 row14 F4 (DIN 3202)
- Product marking according to EN 19; EN 1171

.

Application:

Industrial water, water and air networks and tanks; heating installations, petroleum compounds, coke-oven gas and other inert liquids.
Working conditions:
temp. up +120˚C (bronze rings), +150˚C (stainless steel rings)
pressure up to 1,6 MPa

Execution variant:

Ductile cast iron EN-GJS 500-7
With SS body bonnet screws
With inductive or electromechanical sensors
With opening indicator

Test control:

Water pressure test according to EN 1074-1; EN 1074-2;
EN 12266-1
Seat: 1,1 xPN
Body: 1,5 x PN
Air pressure test according to EN 12266-1
Seat: 1,1 x PN;
Body: 1,1 x PN
Operation torque test

Accessories:

Handwheel - see: 9301

Installation:

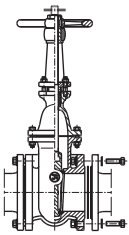

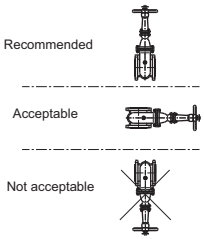

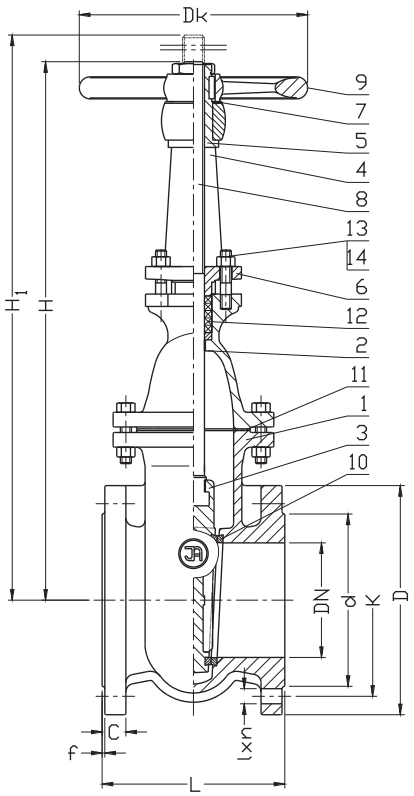

No.	Part	Standard execution
1	Body	Ductile cast iron EN-GJS 400-15 EN-GJS-500-7 EN 1563
2	Bonnet	Ductile cast iron EN-GJS 400-15 EN-GJS-500-7 EN 1563
3	Wedge	Ductile cast iron EN-GJS 400-15 EN-GJS-500-7 EN 1563
4	Pillar	Ductile cast iron EN-GJS 400-15 EN-GJS-500-7 EN 1563
5	Threaded bushing	Ductile cast iron EN-GJS-500-7 EN 1563 Bronze EN 1982
6	Clamping plate	Ductile cast iron EN-GJS 400-15 EN-GJS-500-7 EN 1563
7	Spindle washer	Bronze CW306G EN 12163
8	Spindle	Stainless steel 1.4021 EN 10088-1
9	Handwheel	Grey iron EN-GJL-250 EN 1561
10	Ring	Stainless steel 1.4021 EN 10088-1 Bronze EN 1982*
11	Body-bonnet gasket	Non-asbestos gasket Graphite - DN40-300 AF300 - DN350-600
12	Gland seal	Graphite - DN40-300; Graphite or PTFE - DN350-600
13	Screw	Steel 1.0038 DN40-300 Fe/Zn5 DN350-600 EN ISO 4017
14	Nut	Steel 1.0038 DN40-300 Fe/Zn5 DN350-600 EN ISO 4027

- other material variants on special request

Seal	120°C	150°C
Steel ring	PS10/16	PS10
Bronze ring*	PS10/16	

DN	PN	L	H/H1	d PN16 (PN10)	D PN16 (PN10)	K PN16 (PN10)	C	f	l PN16 (PN10)	n	Dk	LH thread	Weight
[mm]	[bar]	[mm]								-	[mm]		[kg]
40	10-16	140	244/295	84	150	110	19	3	19	4	160	Tr12X3	12
50	10-16	150	255/315	99	165	125	19	3	19	4	160	Tr12X3	14,8
65	10-16	170	277/352	118	185	145	19	3	19	4	160	Tr16X4	18,5
80	10-16	180	303/398	132	200	160	19	3	19	8	160	Tr16X4	21,2
100	10-16	190	340/465	156	220	180	19	3	19	8	200	Tr20X4	31
125	10-16	200	387/527	10-16	250	210	19	3	19	8	200	Tr20X4	43,6
150	10-16	210	454/624	211	285	240	19	3	23	8	200	Tr22X5	53,7
200	10-16	230	538/755	266	340	295	20	3	23	12(8)	250	Tr22X5	82,5
250	10-16	250	629/898	319	405 (395)	355 (350)	22	3	28 (23)	12	250	Tr26X5	105
300	10-16	270	730/1050	370	460 (445)	410 (400)	25	4	28 (23)	12	320	Tr28X5	152
350	10-16	290	1280/1650	429	520 (505)	470 (460)	27	4	28 (23)	16	320	Tr32X6	225
400	10-16	310	1410/1830	480	580 (565)	525 (515)	28	4	31 (28)	16	320	Tr32X6	330
500	10-16	350	1720/2550	609 (582)	715 (670)	650 (620)	32	4	34 (28)	20	630	Tr40X6	430
600	10-16	390	1990/2615	720 (682)	840 (780)	770 (725)	36	5	37 (31)	20	630	Tr40X6	668

We reserve the rights to modify the production program and the given data without separate notices due to the permanent company development.

Gate valve
soft seated with PE pipe ends

PN16

WATER

Gate valve DN100

Packing cork protected against unscrewing and fully covered by additional cleaning gasket

Horizontal and vertical double spindle bearing

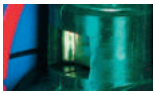

Replaceable wedge nut

Application of low friction sliding element

Product description (standard execution):

- Body bonnet and wedge made of ductile cast iron EN-GJS 400-15
- Full bore gate valve
- NBR/EPDM fully vulcanised wedge
- Application of low friction sliding element
- Forged replaceable wedge nut made of brass
- Stainless steel spindle with rolled thread
- Low friction double spindle bearing both horizontal and vertical way
- O-ring spindle sealing packing cork protected against medium
- Under pressure replaceable packing cork
- Forged packing cork protected against unscrewing
- Packing cork protected against dirt penetration
- Body bonnet Zinc coated screws protected by wax
- Epoxy coating minimum 250 microns according to EN 14901GSK RAL certyficate
- Article according to EN 1074-1, EN 1074-2; EN 1171
- End connectors made of PE 100 SDR 11 pipe
- The PE pipe end connectors enables direct welding into PE pipes
- PE/Steel connection sealed with a plastic shrink hose ring
- Product marking according to EN 19; EN 1171

Application:

Water networks and tanks. Transport of non agressive liquids.
Working conditions:
temp. from -10˚C to + 40˚C
pressure up to 1,6 MPa

Execution variant:

SS body and bonnet screws
Connectors adapted for PE pipes PE100 SDR17
With Protegol coating

Test control:

Hydraulic test according to EN 1074-1; EN 1074-2; EN 12266-1
Seat: 1,1 x PN
Body: 1,5 x PN
Operation torque test.

Installation:

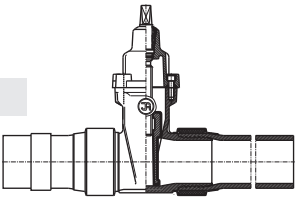

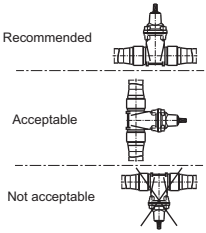

Accessories:

Extension spindle - see: 9010, 9011
Pillar with handwheel - see: 9113
Pillar for electric actuator - see: 9114
Street box - see: 9501,9503,9504, 9509

2120

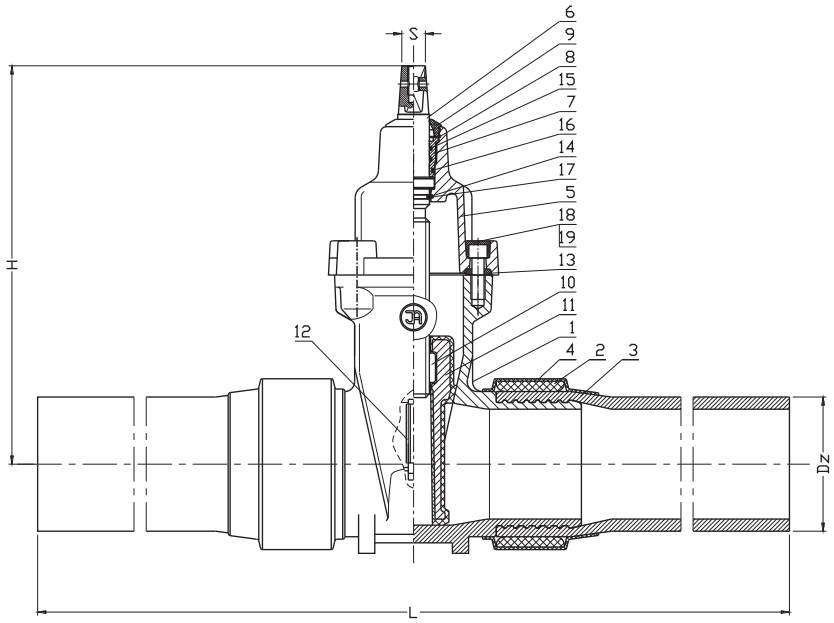

DN	H	Dz	L	S	Turn for full open	Weight
[mm]						[kg]
25	130	32	800	12	7,5	4
32	145	40	800	12	9	5
40	220	50	850	14	11	6
50	230	63	850	14	13,5	11
65	265	75	860	17	14	13
80	290	90	860	17	17	21
100	325	110	900	19	21	24
125	365	125	1100	19	26	33
150	457	160	1100	19	26	49
150	457	180	1100	19	26	52
200	534	200	1100	24	34,5	76
200	534	225	1100	24	34,5	80
250	633	250	1200	27	42,5	102
250	633	280	1200	27	42,5	110
300	708	315	1300	27	51	150

No.	Part	Standard execution
1	Body	Ductile cast iron EN-GJS 400-15 EN 1563
2	Clamping ring	Steel 1.0037 EN 10025-2
3	PE pipe ends	PE 100 SDR 11 EN 1555-2
4	Shrink hose	Plastic
5	Bonnet	Ductile cast iron EN-GJS 400-15 EN 1563
6	Spindle	Steel 1.4021 EN 10088-1
7	Packing cork	Brass CW617N EN 12165
8	Protection ring	Steel 1.1260 EN-74/H-84032
9	Cleaning gasket	Rubber EPDM or NBR EN ISO 1629
10	Spindle nut	Brass CW617N EN 12165
11	Wedge	Brass CW617N EN 12165 (DN25-32) Ductile cast iron (DN40-DN300) EN-GJS 400-15 EN 1563 Rubber EPDM / NBR: EN ISO 1629
12	Wedge slider	Tarnoform 300 EN ISO 1874-1
13	Body-bonnet gasket	Rubber EPDM or NBR EN ISO 1629
14-17	O-ring	Rubber EPDM or NBR EN ISO 1629
18	Screw	Steel Fe/Zn5 stainless steel EN ISO 4762
19	Screw stopper	Wax

- other material variants on special request

We reserve the rights to modify the production program and the given data without separate notices due to the permanent company development.

Resilient seated gate valve
for PE pipes

PN10
PN16

WATER

Gate valve DN80

Packing cork protected against unscrewing and fully covered by additional cleaning gasket

Horizontal and vertical double spindle bearing

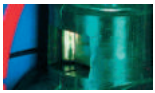

Replaceable wedge nut

Application of low friction sliding element

Product description (standard execution):

- Buffer zone and flexible tube positioning
- PE tube clamping ring protection against slipping
- Body bonnet and wedge made of ductile cast iron EN-GJS 400-15
- Full bore gate valve
- NBR/EPDM fully vulcanised wedge
- Application of low friction sliding element
- Wedge nut made of forged brass - replaceable
- Stainless steel spindle with rolled thread
- Low friction double spindle bearing acting both horizontal and vertical way
- O-ring spindle sealing packing cork protected against contact with medium
- Under pressure replaceable packing cork
- Forged packing cork protected against unscrewing
- Packing cork protected against dirt penetration
- Body bonnet Zinc coated screws protected by wax
- Epoxy coating minimum 250 microns according to EN 14901 GSK RAL certificate
- Product according to EN 1074-1, EN 1074-2; EN 1171
- Face to face according to producer documentation JAFAR
- Product marking according to EN 19; EN 1074

Application:

Water networks and tanks. Transport of non agressive liquids implemented with PE and PVC pipes with working pressure up to 1.6 MPa
Working conditions:
temp. up +40˚C

Execution variant:

Ductile cast iron EN-GJS 500-7
SS body and bonnet screws
With ISO top flange for actuator
With electric or pneumatic actuator
With inductive or electromechanical sensor
With opening indicator
Other material variants on request!

Test control:

Hydraulic test according to EN 1074-1; EN 1074-2; EN 12266-1
Seat: 1,1 xPN
Body: 1,5 x PN
Operation torque test.

Installation:

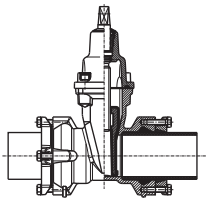

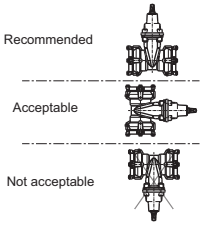

Accessories:

Extension spindle - see: 9010, 9011
Pillar with handwheel - see: 9113
Pillar for electric actuator - see: 9114
Street box - see: 9501, 9503, 9504, 9509

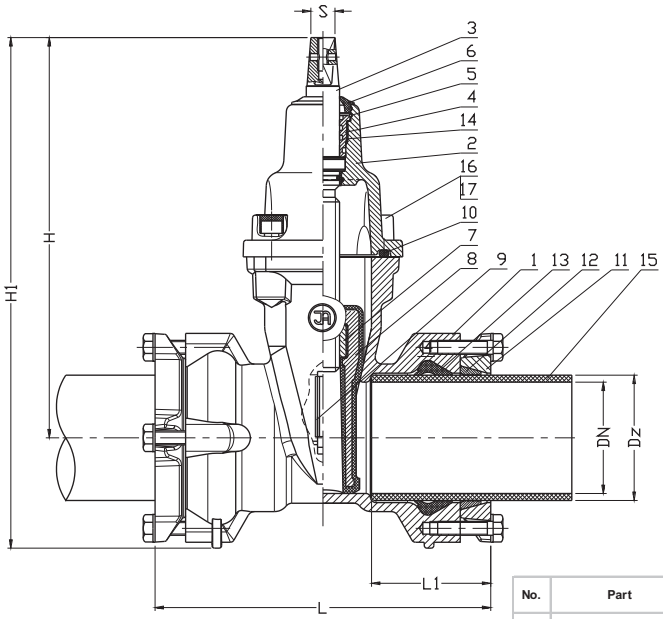

DN	Dz	H	H1	L	L1	S	Weight
[mm]							[kg]
50	63	230	295	226	82	14	5
65	75	265	335	240	85	17	11
80	90	290	367	242	86	17	15
100	110	325	412	252	86	19	19
100	125	325	412	260	86	19	21
125*	125	365	458	280	90	19	29
150	160	457	575	326	90	19	38
200	200	534	674	366	128	24	56
200	225	534	674	366	128	24	58
250	250	650	825	400	137	27	87
250	280	650	835	420	147	27	97
300	315	708	908	472	176	27	135

No.	Part	Standard execution
1	Body	Ductile cast iron EN-GJS-400-15 EN 1563
2	Bonnet	Ductile cast iron EN-GJS-400-15 EN 1563
3	Spindle	Stainless steel 1.4021 EN 10088-1
4	Packing cork	Brass CW617N EN 12165
5	Protection ring	Steel 1.1260
6	Cleaning gasket	Rubber EPDM or NBR EN ISO 1629
7	Spindle nut	Brass CW617N EN 12165
8	Wedge	Ductile cast iron (DN50-DN300) EN-GJS-400-15 EN 1563 Rubber EPDM or NBR: EN ISO 1629
9	Wedge slider	Tarnoform 300 EN ISO 1874-1
10	Body-bonnet gasket	Rubber EPDM or NBR EN ISO 1629
11	Forked flange	Ductile cast iron EN-GJS-500-7 EN 1563
12	Ring	Brass CW617N EN 12165
13	FORSHED ring	Rubber EPDM or NBR EN ISO 1629
14	O-ring	Rubber EPDM or NBR EN ISO 1629
15	PE pipe	SDR11 EN 1555-2
16	Screw	Stal Fe/Zn5, stainless steel EN ISO 4762
17	Screw stopper	Wax

- other material variants on special request

* - implementation

We reserve the rights to modify the production program and the given data without separate notices due to the permanent company development.

Resilient seated gate valve
with spigot ends

PN10
PN16

SEWAGE

WATER

Gate valve DN50

Packing cork protected against unscrewing and fully covered by additional cleaning gasket

Horizontal and vertical double spindle bearing

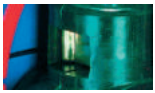

Replaceable wedge nut

Application of low friction sliding element

Product description (standard execution):

- Easy installation with sockets cast-iron pipes
- Body bonnet and wedge made of ductile cast iron EN-GJS 400-15
- Full bore gate valve
- NBR/EPDM fully vulcanised wedge
- Wedge nut made of forged brass - replaceable
- Application of low friction sliding element
- Stainless steel spindle with rolled thread
- Low friction double spindle bearing acting both horizontal and vertical way
- O-ring spindle sealing packing cork protected against contact with medium
- Under pressure replaceable packing cork
- Forged packing cork protected against unscrewing
- Packing cork protected against dirt penetration
- Body bonnet Zinc coated screws protected by wax
- Epoxy coating minimum 250 microns according to EN 14901 GSK RAL certificate
- Product according to EN 1074-1, EN 1074-2; EN 1171
- Face to face according to producer documentation JAFAR
- Product marking according to EN 19; EN 1074

Application:

Water and sewage networks and tanks. Transport of non agressive liquids.
Working conditions:
temp. up +70˚C

Execution variant:

Ductile cast iron EN-GJS 500-7
SS body and bonnet screws
With ISO top flange for actuator
With electric or pneumatic actuator - see.: 2901 2902 2903 2911
With inductive or electromechanical sensor
With opening indicator
Other material variants on request!

Test control:

Hydraulic test according to EN 1074-1; EN 1074-2; EN 12266-1
Seat: 1,1 xPN
Body: 1,5 x PN
Operation torque test.

Installation:

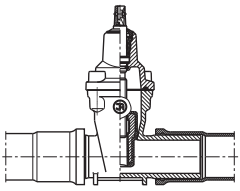

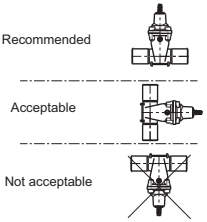

Accessories:

Extension spindle - see: 9010, 9011
Pillar with handwheel - see: 9113
Pillar for electric actuator - see: 9114
Street box - see: 9501, 9503, 9504, 9509

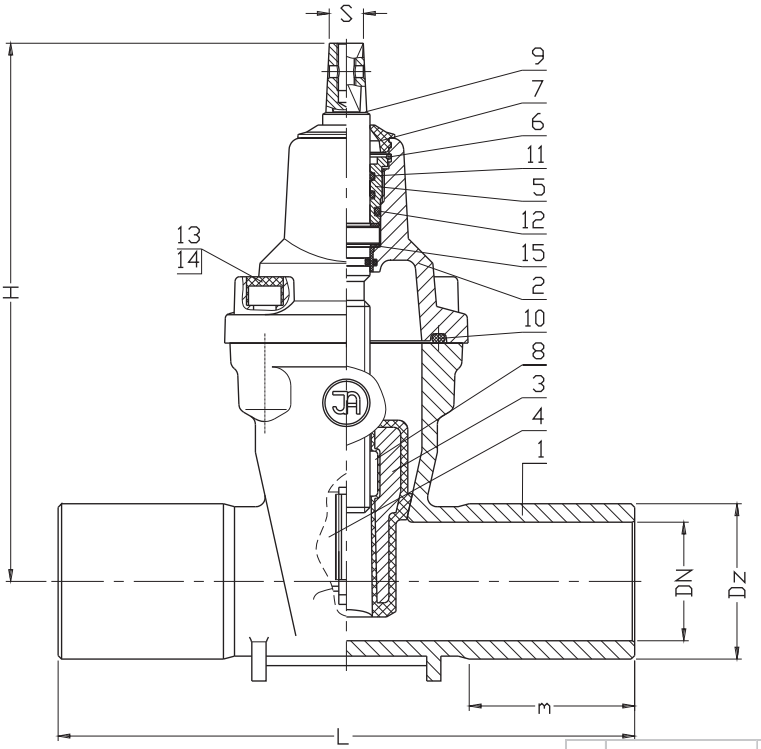

No.	Part	Standard execution
1	Body	Ductile cast iron EN-GJS-500-7 EN 1563
2	Bonnet	Ductile cast iron EN-GJS-500-7 EN 1563
3	Wedge	Ductile cast iron EN-GJS-500-7 EN 1563 Rubber EPDM P\EN ISO 1629
4	Wedge slider	Tarnoform 300 EN ISO 1874-1
5	Packing cork	Brass CW617N EN 12165
6	Protection ring	Steel 1.1260
7	Cleaning gasket	Rubber EPDM EN ISO 1629
8	Spindle nut	Brass CW617N EN 12165
9	Spindle	Stainless steel 1.4021 EN 10088-1
10	Body-bonnet gasket	Rubber EPDM EN ISO 1629
11 12	O-Ring	Rubber EPDM EN ISO 1629
13	Screw	Steel Fe/Zn5 stainless steel EN ISO 4762
14	Screw stopper	Wax
15	Washer	Tarnoform 300 EN ISO 1874-1

- other material variants on special request

DN	Dz	L	m	H	S	Weight
[mm]						[kg]
50	66	244	70	230	14	8
65	82	264	80	265	17	9
80	98	274	85	290	17	12
100	118	294	85	325	19	21
125	144	319	87	365	19	29
150	170	344	95	457	19	42
200	222	394	110	534	24	69
250	274	444	130	633	27	94
300	326	494	130	708	27	141

We reserve the rights to modify the production program and the given data without separate notices due to the permanent company development.

Resilient seated gate valve
with opening indicator flanged

PN10
PN16

FIRE PROTECTION

WATER

Gate valve DN100

Packing cork protected against unscrewing and fully covered by additional cleaning gasket

Horizontal and vertical double spindle bearing

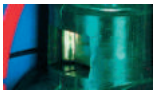

Replaceable wedge nut

Application of low friction sliding element

Product description (standard execution):

- Corrosion resistant opening indicator
- Body bonnet and wedge made of ductile cast iron EN-GJS 400-15; EN-GJS 500-7
- Full bore gate valve
- NBR/EPDM fully vulcanised wedge
- Application of low friction sliding element
- Wedge nut made of forged brass - replaceable
- Stainless steel spindle with rolled thread
- Low friction double spindle bearing acting both horizontal and vertical way
- O-ring spindle sealing packing cork protected against contact with medium
- Under pressure replaceable packing cork
- Forged packing cork protected against unscrewing
- Packing cork protected against dirt penetration
- Body bonnet Zinc coated screws protected by wax
- Epoxy coating minimum 250 microns according to EN 14901 GSK RAL certificate
- Product according to EN 1074-1, EN 1074-2; EN 1171
- Flange connection according to EN 1092-2 (DIN 2501) pressure PN10; PN16
- Face to face according to EN 558-A1 F5 (DIN 3202) – catalogue number 2002
- Face to face according to EN 558-A1 F4 (DIN 3202) – catalogue number 2111
- Product marking according to EN 19; EN 1074

Application:

Water networks, tanks and fire fighting instalations. Transport of non agressive liquids.
Working conditions:
temp. up +70˚C
pressure up to 1,6 MPa

Execution variant:

With inductive or electromechanical sensors

Test control:

Hydraulic test according to EN 1074-1; EN 1074-2; EN 12266-1
Seat: 1,1 xPN
Body: 1,5 x PN
Operation torque test.

Installation:

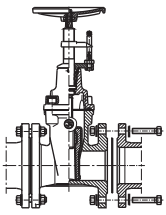

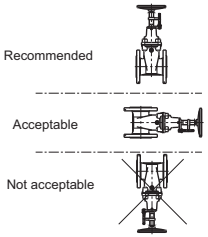

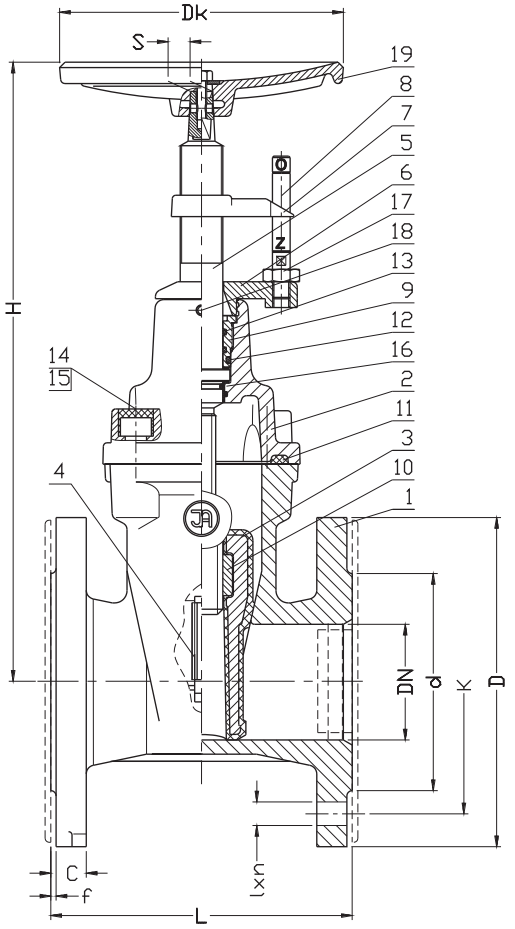

No.	Part	Standard execution
1	Body	Ductile cast iron EN-GJS-400-15 or EN-GJS-500-7 EN 1563
2	Bonnet	Ductile cast iron EN-GJS-400-15 or EN-GJS-500-7 EN 1563
3	Wedge	Ductile cast iron EN-GJS-400-15 EN-GJS-500-7 EN 1563 Rubber EPDM or NBR; EN ISO 1629
4	Wedge slider	Tarnoform 300 EN ISO 1874-1
5	Spindle	Stainless steel 1.4057; 1.4021 EN 10088-1
6	Indicator holder	Grey iron EN-GJL-250 EN 1561 Polyprophylene EN ISO 1872-1
7	Indicator	Brass CW617N EN 12165 Polyethylene, EN ISO 1872-1
8	Scale	Stainless steel 1.4021 EN 10088-1
9	Packing cork	Brass CW617N EN 12165
10	Spindle nut	Brass CW617N EN 12165
11	Body-bonnet gasket	Rubber EPDM or NBR EN ISO 1629
12 13	O-ring	Rubber EPDM or NBR EN ISO 1629
14	Screw	Steel Fe/Zn5; stainless steel EN ISO 4762
15	Screw stopper	Wax
16	Washer	Tarnoform 300 EN ISO 1874-1
17	Nut	Steel Fe/Zn5; stainless steel EN ISO 4032
18	Screw	Stainless steel EN ISO 4027
19	Handwheel	Grey iron EN-GJL-250 EN 1561

- other material variants on special request

DN	2511 L	2502 L	H	d PN16 (PN10)	D	K PN16 (PN10)	l PN16 (PN10)	C	f	n PN16 (PN10)	Dk	S	Weight	Weight
[mm]										-	[mm]		2511 [kg]	2502 [kg]
40	140	240	290	84	150	110	19	19	3	4	200	14	11	12
50	150	250	315	99	165	125	19	19	3	4	200	14	13	14
65	170	270	345	118	185	145	19	19	3	4	200	17	18	19
80	180	280	385	132	200	160	19	19	3	8	200	17	21	23
100	190	300	435	156	220	180	19	19	3	8	250	19	30	33
125	200	325	475	184	250	210	19	19	3	8	250	19	36	42
150	210	350	535	211	285	240	23	19	3	8	250	19	50	54
200	230	400	620	266	340	295	23	20	3	12 (8)	320	24	70	87
250	250	450	720	319	405	355 (350)	28 (23)	22	3	12	320	27	98	112
300	270	500	830	370	460	410 (400)	28 (23)	25	4	12	320	27	132	159
350	290	550	940	429	520	470 (450)	28 (23)	27	4	16	320	27	223	262

We reserve the rights to modify the production program and the given data without separate notices due to the permanent company development.

Resilient seated gate valve
with opening indicator flanged

PN10
PN16

FIRE PROTECTION

WATER

Gate valve DN500

Product description (standard execution):

- Corrosion resistant opening indicator
- Body bonnet and wedge made of ductile cast iron EN-GJS 400-15; EN-GJS 500-7
- Full bore gate valve
- NBR/EPDM fully vulcanised wedge
- Application of low friction sliding element
- Wedge nut made of forged brass - replaceable
- Stainless steel spindle with rolled thread
- Low friction double spindle bearing acting both horizontal and vertical way
- O-ring spindle sealing packing cork protected against contact with medium
- Forged packing cork protected against unscrewing
- Body bonnet Zinc coated screws protected by wax
- Epoxy coating minimum 250 microns according to EN 14901 GSK RAL certificate
- Product according to EN 1074-1, EN 1074-2; EN 1171
- Flange connection according to EN 1092-2 (DIN 2501) pressure PN10; PN16
- Face to face according to EN 558-A1 F5 (DIN 3202) – catalogue number 2002
- Face to face according to EN 558-A1 F4 (DIN 3202) – catalogue number 2111
- Product marking according to EN 19; EN 1074

Application:

Water networks, tanks and fire fighting instalations. Transport of non agressive liquids.
Working conditions:
temp. up +70˚C
pressure up to 1,6 MPa

Execution variant:

With inductive or electromechanical sensors

Test control:

Hydraulic test according to EN 1074-1; EN 1074-2; EN 12266-1
Seat: 1,1 xPN
Body: 1,5 x PN
Operation torque test.

Installation:

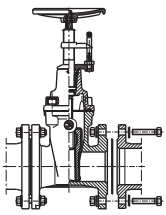

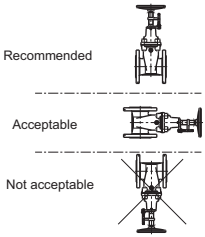

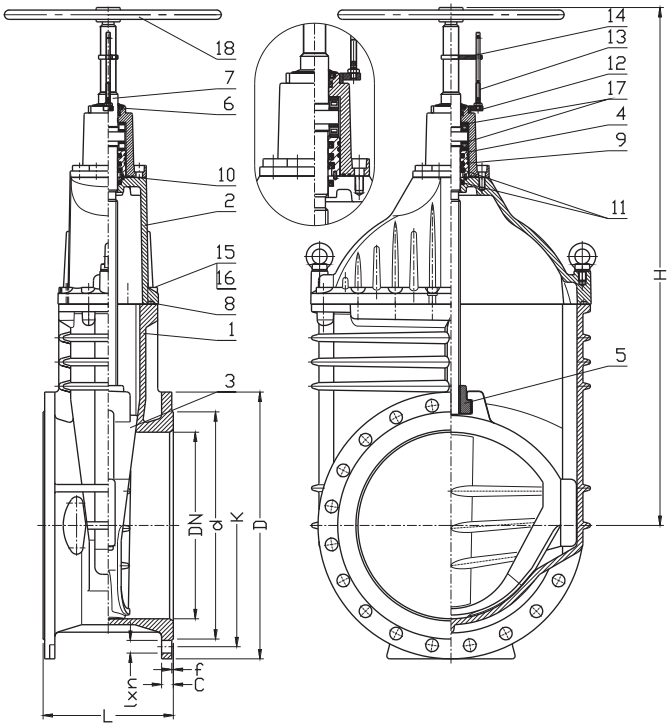

No.	Part	Standard execution	No.	Part	Standard execution
1	Body	Ductile cast iron EN-GJS-400-15 or EN-GJS-500-7 EN 1563	9,10, 11	O-ring	Rubber NBR or EPDM EN-ISO 1629
2	Bonnet	Ductile cast iron EN-GJS-400-15 or EN-GJS-500-7 EN 1563	12	Indicator holder	Steel S235JR EN 10025
3	Wedge slider	Ductile cast iron EN-GJS-400-15 or EN-GJS-500-7; EN 1563 Rubber NBR or EPDM: EN-ISO 1629 Tarnoform 300 EN ISO 1874-1	13	Indication	Stainless steel 1.4021 EN 10088-1
4	Sealing sleeve	Brass CW617N EN 12165	14	Indicator	Brass EN 1982 Stainless steel 1.4301 EN 10088-1
5	Spindle nut	Brass CW617N EN 12165	15	Screw	Steel Fe/Zn5, stainless steel EN ISO 4762
6	Cleaning gasket	Rubber NBR or EPDM EN-ISO 1629	16	Screw stopper	Wex
7	Spindle	Stainless steel 1.4021, 1.4057 EN 10088-1	17	Bearing	Producer catalogue
8	Body-bonnet gasket	Rubber NBR or EPDM EN-ISO 1629	18	Handwheel	Steel S235JR EN-10025

DN	2511 L	2502 L	H	d PN16 (PN10)	D	K PN16 (PN10)	l PN16 (PN10)	C	f	n PN16 (PN10)	Dk	S	Weight	Weight
[mm]										-	[mm]		2511 [kg]	2502 [kg]
400	310	600	1200	480	580	525 (515)	31 (28)	28	4	16	630	32	309	354
450	330	-	1270	548(530)	640	585 (565)	31 (28)	30	4	20	630	32	359	-
500	350	700	1370	609(582)	715(670)	650 (620)	34 (28)	32	4	20	630	36	467	553
600	390	800	1390	720(682)	840(780)	770 (725)	37 (31)	36	5	20	630	36	650	786

We reserve the rights to modify the production program and the given data without separate notices due to the permanent company development.

Metal seated gate valve with opening indicator
flanged

PN10
PN16

INDUSTRY

Gate valve 2509 DN200

Product description (standard execution):

- Opening indicator
- Body and wedge face seal rings made of bronze
- Graphite or PTFE + graphite packing gland of spindle
- Stainless steel spindle with rolled thread - non rising
- Body, bonnet and wedge made of ductile cast iron EN-GJS 400-15
- Non-asbestos body bonnet gasket, graphite or AF300 - flat
- Stainless steel body bonnet screws
- Polyvinyl coating minimum 100 microns according to EN 14901
- Product according to EN 1171
- Flange connection according to EN 1092-2 (DIN 2501) pressure PN10; PN16
- Face to face according to EN 558-A1 row14 F4 (DIN 3202)
- Product marking according to EN 19; EN 1171

Application:

Salt water,iIndustrial water networks and tanks.
Working conditions:
temp. up +120˚C
pressure up to 1,6 MPa

Execution variant:

Ductile cast iron EN-GJS 500-7
With inductive or electromechanical sensors

Test control:

Water pressure test according to EN 1074-1; EN 1074-2;
EN 12266-1
Seat: 1,1 xPN
Body: 1,5 x PN
Operation torque test

Installation:

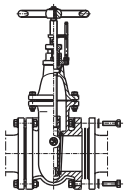

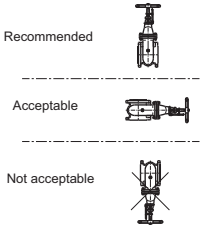

Accessories:

Extension spindle - see: 9010, 9011
Pillar with handwheel - see: 9113
Pillar for electric actuator - see: 9114
Handwheel - see: 9301
Street box - see: 9501, 9503, 9509

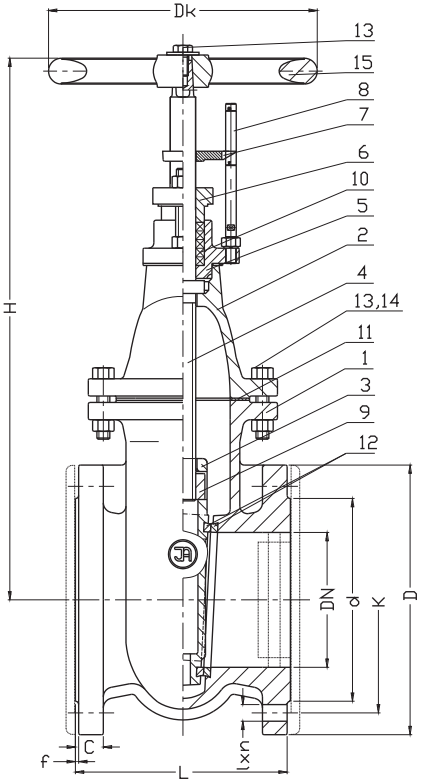

No.	Part	Standard execution
1	Body	Ductile cast iron EN-GJS-400-15 EN-GJS-500-7 EN 1563
2	Bonnet	Ductile cast iron EN-GJS-400-15 EN-GJS-500-7 EN 1563
3	Wedge	Ductile cast iron EN-GJS-400-15 EN-GJS-500-7 EN 1563
4	Spindle	Stainless steel 1.4057 EN 10088-1
5	Gland	Ductile cast iron EN-GJS-400-15 EN-GJS-500-7 EN 1563
6	Clamping plate	Ductile cast iron EN-GJS-400-15 EN-GJS-500-7 EN 1563
7	Indicator	Bronze EN 1982
8	Scale	Stainless steel 1.4057 EN 10088-1
9	Spindle nut	Bronze EN 1982
10	Gland seal	Graphite - DN40-300; Graphite or PTFE - DN350-600
11	Body-bonnet gasket	Non-asbestos gasket Graphite - DN40-300 AF300 - DN350-600
12	Ring	Bronze EN 1982
13	Screw	Steel 1.0038 DN40-300, Stainless steel A2 DN350-600 EN ISO 4017
14	Nut	Steel 1.0038 DN40-300 Stainless steel A4 DN350-600 EN ISO 4027
15	Handwheel	Grey iron EN-GJL-250 EN 1561

- other material variants on special request

DN	PN	L	H	d PN16 (PN10)	D PN16 (PN10)	K PN16 (PN10)	C	f	l PN16 (PN10)	n	Dk	LH thread
[mm]	[bar]	[mm]								-		
40	10-16	140	245	84	150	110	19	3	19	4	160	Tr12X3
50	10-16	150	255	99	165	125	19	3	19	4	160	Tr12X3
65	10-16	170	277	118	185	145	19	3	19	4	160	Tr16X4
80	10-16	180	303	132	200	160	19	3	19	8	160	Tr16X4
100	10-16	190	340	156	220	180	19	3	19	8	200	Tr20X4
125	10-16	200	407	184	250	210	19	3	19	8	200	Tr20X4
150	10-16	210	474	211	285	240	19	3	23	8	200	Tr22X5
200	10-16	230	558	266	340	295	20	3	23	12	250	Tr22X5
250	10-16	250	669	319	405 (395)	355 (350)	22	3	28 (23)	12	250	Tr26X5
300	10-16	270	770	370	460 (445)	410 (400)	25	4	28 (23)	12	320	Tr28X5
350	10-16	290	900	429	520 (505)	470 (460)	27	4	28 (23)	16	320	Tr32X6
400	10-16	310	975	480	580 (565)	525 (515)	28	4	31 (28)	16	320	Tr32X6
500	10-16	350	1180	609 (582)	715 (670)	650 (620)	32	4	34 (28)	20	630	Tr40X6
600	10-16	390	1355	720 (682)	840 (780)	770 (725)	36	5	37 (31)	20	630	Tr40X6

We reserve the rights to modify the production program and the given data without separate notices due to the permanent company development.

Resilient seated gate valve
flanged GOST

PN10
PN16

SEWAGE

WATER

Gate valve 2700 DN80

Packing cork protected against unscrewing and fully covered by additional cleaning gasket

Horizontal and vertical double spindle bearing

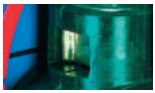

Replaceable wedge nut

Application of low friction sliding element

Product description (standard execution):

- Body bonnet and wedge made of ductile cast iron EN-GJS 400-15
- Full bore gate valve
- NBR/EPDM fully vulcanised wedge
- Application of low friction sliding element
- Wedge nut made of forged brass - replaceable
- Stainless steel spindle with rolled thread
- Low friction double spindle bearing acting both horizontal and vertical way
- O-ring spindle sealing packing cork protected against contact with medium
- Under pressure replaceable packing cork
- Forged packing cork protected against unscrewing
- Packing cork protected against dirt penetration
- Body bonnet Zinc coated screws protected by wax
- Epoxy coating minimum 250 microns according to EN 14901 GSK RAL certificate
- Product according to EN 1074-1, EN 1074-2; EN 1171
- Flange connection according to EN 1092-2; (DIN 2501) pressure PN10; PN16
- Face to face according to GOST 3706
- Product marking according to EN 19; EN 1074

Application:

Water and sewage networks and tanks. Transport of non agressive liquids.
Working conditions:
temp. up +70˚C

Execution variant:

Ductile cast iron EN-GJS 500-7
SS body and bonnet screws
With ISO top flange for actuator
With electric or pneumatic actuator
With inductive or electromechanical sensor
With opening indicator
Other material variants on request!

Test control:

Hydraulic test according to EN 1074-1; EN 1074-2; EN 12266-1
Seat: 1,1 xPN
Body: 1,5 x PN
Operation torque test.

Installation:

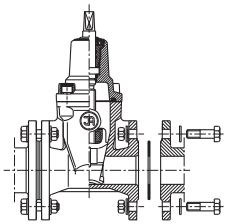

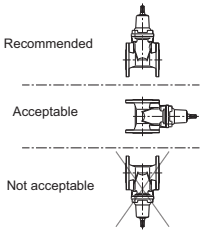

Accessories:

Extension spindle - see: 9010, 9011
Pillar with handwheel - see: 9113
Pillar for electric actuator - see: 9114
Handwheel - see: 9301
Street box - see: 9501,9503, 9504, 9509

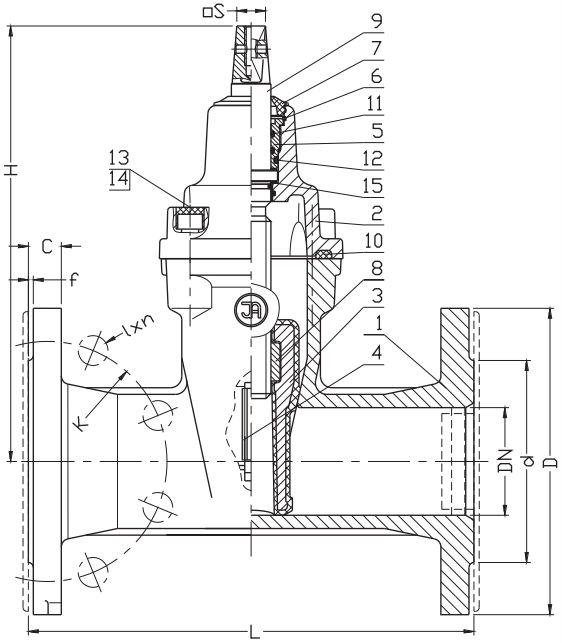

No.	Part	Standar execution
1	Body	Ductile cast iron EN-GJS-400-15 EN 1563
2	Bonnet	Ductile cast iron EN-GJS-400-15 EN 1563
3	Wedge	Ductile cast iron (DN50-DN300) EN-GJS-400-15 EN 1563 Rubber EPDM NBR EN ISO 1629
4	Wedge slider	Tarnoform 300 EN ISO 1874-1
5	Packing cork	Brass CW617N EN 12165
6	Protection ring	Steel 1.1260
7	Cleaning gasket	Rubber EPDM or NBR EN ISO 1629
8	Spindle nut	Brass CW617N EN 12165
9	Spindle	Stainless Steel 1.4021 EN 10088-1
10	Body-bonnet gasket	Rubber EPDM or NBR EN ISO 1629
11 12	O-ring	Rubber EPDM or NBR EN ISO 1629
13	Screw	Steel Fe/Zn5, stainless steel EN ISO 4762
14	Screw stopper	Wax
15	Washer	Tarnoform 300 EN ISO 1874-1

- other material variants on special request

DN	L	H	d PN16 (PN10)	D PN16 (PN10)	K PN16 (PN10)	l PN16 (PN10)	C	f	n PN16 (PN10)	Turn for full open	S	Weight [kg]
[mm]									-		[mm]	[kg]
50	178	230	99	165	125	19	19	3	4	13,5	14	9
65	190	265	118	185	145	19	19	3	4	14	17	14
80	210	290	132	200	160	19	19	3	8	17	17	15
100	230	325	156	220	180	19	19	3	8	21	19	21
125	255	365	184	250	210	19	19	3	8	26	19	30
150	28	457	211	285	240	23	19	3	8	26	19	41
200	330	534	266	340	295	23	20	3	12 (8)	34,5	24	63
250	450	633	319	405	355 (350)	28 (23)	22	3	12	42,5	27	106
300	500	708	370	460	410 (400)	28 (23)	25	4	12	51	27	148

We reserve the rights to modify the production program and the given data without separate notices due to the permanent company development.

Wall-mounted penstock

SEWAGE

Product description (standard execution)

- Tightness in both flow directions class C according to PN-EN 12266-1
- Body and closing component made of steel 1.4301
- Rigid and durable construction ensures the safe operation
- Full-flow product, no dead zones
- Circumferential sealing of the closing component made of silicone elastomer LAR
- Replaceable sealing of the closing component without disassembling of the penstock
- Replaceable nut made of bronze
- Stainless steel valve stem
- Screws and washers connecting the elements made of stainless steel
- Nominal outer diameter of the connection according to PN-EN ISO 6708
- Installation length according to the technical documentation of the manufacturer JAFAR
- Marking of the penstock complies with the requirements of the norm: PN-EN 19

Application:

In transporting of wastewater and other inert fluids in treatment plants, sewage pumping stations, drainage and hydrotechnical facilities, road drainage systems, flood protection systems. Installations with working pressure up to 0.6 [bar] and temperature range up to +80°C.

Execution variant:

For actuator
With gear
With electric actuator

Accessories:

Pillar for actuator
Housing with cardan shaft
Wall-mounted bracket
Wall-mounted pad

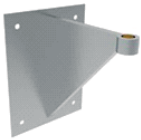

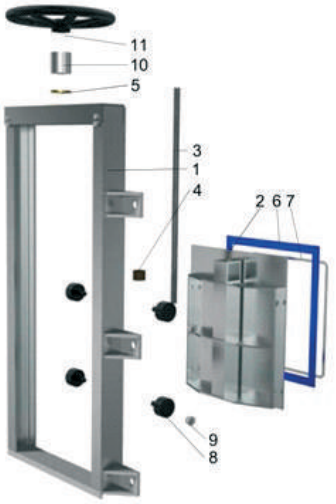

No.	Part name	Material	
		Standard	Optional
1	Body	Steel 1.4301 EN 10088-1	Steel 1.4401 / 1.4404 / 1.4571 EN 10088-1
2	Closing component	Steel 1.4301 EN 10088-1	Steel 1.4401 / 1.4404 / 1.4571 EN 10088-1
3	Stem	Steel 1.4301 EN 10088-1	Steel 1.4401 / 1.4404 / 1.4571 EN 10088-1
4	Nut	Bronze CW306G EN 12163	-
5	Bearing	Bronze CW306G EN 12163	-
6	Gasket	Elastomer LAR	EPDM / NBR ISO 1629
7	Camping ring	Steel 1.4301 EN 10088-1	Steel 1.4401 / 1.4404 / 1.4571 EN 10088-1
8	Rollers	POM	Brass CW617N / Bronze CW306G EN 12165, EN 12163
9	Rollers fixing	Steel 1.4301 EN 10088-1	Steel 1.4401 / 1.4404 / 1.4571 EN 10088-1
10	Support socket	Steel 1.4301 EN 10088-1	Steel 1.4401 / 1.4404 / 1.4571 EN 10088-1
11	Wheel	Steel 1.4301 EN 10088-1	-

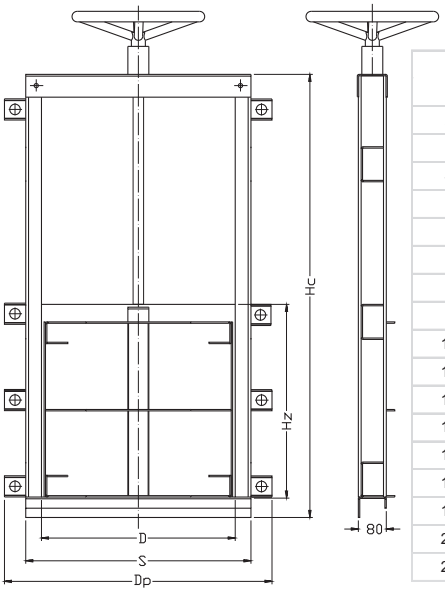

DN	D	S	Dp	Hz	Hc
	mm				
200	200	300	400	250	700
300	300	400	500	350	900
400	400	500	600	450	1100
500	500	600	700	550	1300
600	600	700	800	650	1500
700	700	800	900	750	1700
800	800	900	1000	850	1900
900	900	1000	1100	950	2100
1000	1000	1100	1200	1050	2300
1100	1100	1200	1300	1150	2500
1200	1200	1300	1400	1250	2700
1300	1300	1400	1500	1350	2900
1400	1400	1500	1600	1450	3100
1500	1500	1600	1700	1550	3300
1600	1600	1700	1800	1650	3500
2000	2000	2100	2200	2050	4300
2500	2500	2600	2700	2550	5300

* - Possibility of manufacturing the product according to individual customer needs (pressure, dimensions, materials used, type of drive and method of assembly).
We reserve the rights to modify the production program and the given data without separate notices due to the permanent company development.

Channel penstock

SEWAGE

Product description (standard execution)

- Tightness in both flow directions class C according to PN-EN 12266-1
- Body and closing component made of steel 1.4301
- Rigid and durable construction ensures the safe operation
- Full-flow product, no dead zones
- Circumferential sealing of the closing component made of silicone elastomer LAR
- Replaceable sealing of the closing component without disassembling of the penstock
- Replaceable nut made of bronze
- Stainless steel valve stem
- Screws and washers connecting the elements made of stainless steel
- Nominal outer diameter of the connection according to PN-EN ISO 6708
- Installation length according to the technical documentation of the manufacturer JAFAR
- Marking of the penstock complies with the requirements of the norm: PN-EN 19

Application:

In transporting of wastewater and other inert fluids in treatment plants, sewage pumping stations, drainage and hydrotechnical facilities, road drainage systems, flood protection systems. Installations with working pressure up to 0.6] (generated by the height of the closing component) and temperature range up to +80°C.

Execution variant:

For actuator
With gear
With electric actuator

Accessories:

Pillar for actuator
Housing with cardan shaft

No.	Part name	Material	
		Standard	Optional
1	Body	Steel 1.4301 EN 10088-1	Steel 1.4401 / 1.4404 / 1.4571 EN 10088-1
2	Closing component	Steel 1.4301 EN 10088-1	Steel 1.4401 / 1.4404 / 1.4571 EN 10088-1
3	Stem	Steel 1.4301 EN 10088-1	Steel 1.4401 / 1.4404 / 1.4571 EN 10088-1
4	Nut	Bronze CW306G EN 12163	-
5	Bearing	Bronze CW306G EN 12163	-
6	Gasket	Elastomer LAR	EPDM / NBR ISO 1629
7	Camping ring	Steel 1.4301 EN 10088-1	Steel 1.4401 / 1.4404 / 1.4571 EN 10088-1
8	Rollers	POM	Brass CW617N / Bronze CW306G EN 12165, EN 12163
9	Rollers fixing	Steel 1.4301 EN 10088-1	Steel 1.4401 / 1.4404 / 1.4571 EN 10088-1
10	Support socket	Steel 1.4301 EN 10088-1	Steel 1.4401 / 1.4404 / 1.4571 EN 10088-1
11	Wheel	Steel 1.4301 EN 10088-1	-

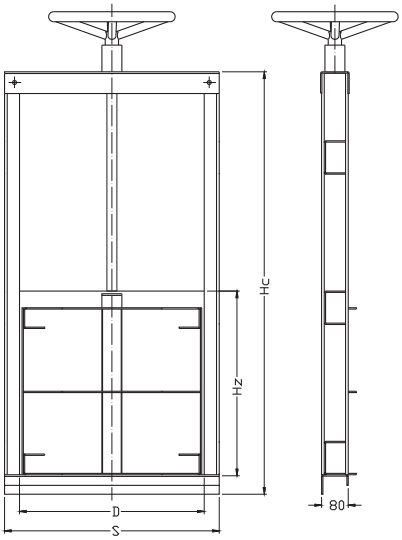

DN	D	S	Hz	Hc
	mm			
200	200	300	200	600
300	300	400	300	800
400	400	500	400	1000
500	500	600	500	1200
600	600	700	600	1400
700	700	800	700	1600
800	800	900	800	1800
900	900	1000	900	2000
1000	1000	1100	1000	2200
1100	1100	1200	1100	2400
1200	1200	1300	1200	2600
1300	1300	1400	1300	2800
1400	1400	1500	1400	3000
1500	1500	1600	1500	3200
1600	1600	1700	1600	3400
2000	2000	2100	2000	4200

* - Possibility of manufacturing the product according to individual customer needs (pressure, dimensions, materials used, type of drive and method of assembly).
We reserve the rights to modify the production program and the given data without separate notices due to the permanent company development.

Non-return flap valve

SEWAGE

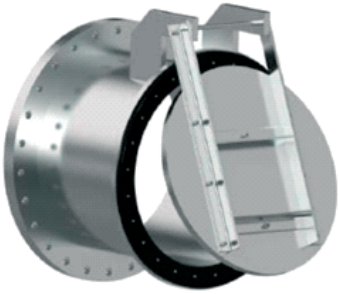

Product description (standard execution)

- Body and flap made of steel 1.4301
- Protection of the medium transmission system against reverse flow
- Rigid and durable construction ensures the safe operation
- Collision-free assembly on final gravity installations
- Full-flow product, no dead zones
- Circumferential sealing of the flap NBR/EPDM
- Replaceable sealing of the backflow shut-off element
- Screws and washers connecting the elements made of stainless steel
- Nominal outer diameter of the connection according to PN-EN ISO 6708
- Installation length according to the technical documentation of the manufacturer JAFAR
- Marking of the flap complies with the requirements of the norm: PN-EN 19

Application:

In transporting of wastewater and other inert fluids in treatment plants, sewage pumping stations, drainage and hydrotechnical facilities, road drainage systems, flood protection systems. Collision-free assembly on final gravity installations.

Assembly:

Wall-mounted of the medium outflow
End of the transmission pipeline

Accessories:

Counterweight, load
Flap lock

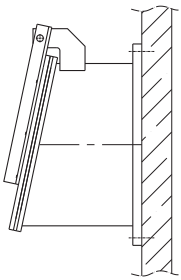

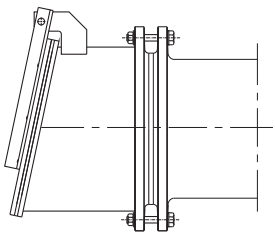

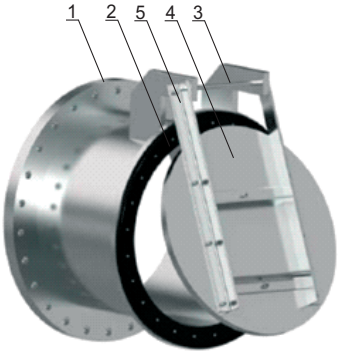

No.	Part name	Material	
		Standard	Optional
1	Body	Steel 1.4301 EN 10088-1	Steel 1.4401 / 1.4404 EN 10088-1
2	Gasket	EPDM ISO 1629	NBR ISO 1629
3	Hinge	Steel 1.4301 EN 10088-1	Steel 1.4401 / 1.4404 EN 10088-1
4	Flap	Steel 1.4301 EN 10088-1	Steel 1.4401 / 1.4404 EN 10088-1
5	Rack	Steel 1.4301 EN 10088-1	Steel 1.4401 / 1.4404 EN 10088-1

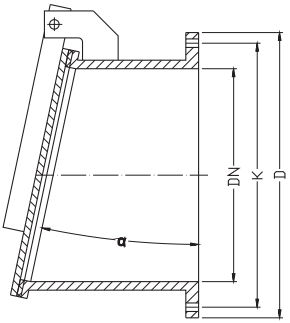

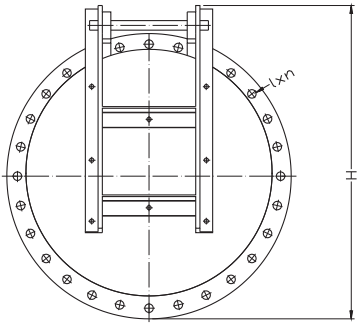

DN	α	D	K	lxn	H
	°	mm			
150	12	285	240	M22x8	552
200	12	340	295	M22x8	619
250	12	395	350	M22x12	681
300	12	455	400	M22x12	734
350	12	505	460	M22x16	779
400	12	565	515	M26x16	832
500	12	670	620	M26x20	955
600	12	780	725	M30x20	1185
700	10	895	840	M30x24	1296
800	10	1015	950	M33x24	1399
900	10	1115	1050	M33x28	1515
1000	10	1230	1160	M36x28	1812
1200	10	1455	1380	M39x32	2033
1400	10	1675	1590	M39x36	2215
1600	10	1915	1820	M45x40	2560

* - Possibility of manufacturing the product according to individual customer needs (pressure, dimensions, materials used, type of drive and method of assembly).
We reserve the rights to modify the production program and the given data without separate notices due to the permanent company development.

Resilient seated gate valve with pneumatic actuator flanged

PN10
PN16

SEWAGE

WATER

Gate valve 2901 DN 200

Product description (standard execution):

- Body bonnet and wedge made of ductile cast iron EN-GJS 400-15; EN-GJS 500-7
- Full bore gate valve
- NBR/EPDM fully vulcanised wedge
- Wedge nut made of forged brass - replaceable
- Application of low friction sliding element
- Pneumatuc actuator for 6 bars operating pressure
- Stainless steel spindle with rolled thread
- Low friction double spindle bearing acting both horizontal and vertical way
- O-ring spindle sealing packing cork protected against contact with medium
- Forged packing cork protected against unscrewing
- Body bonnet Zinc coated screws protected by wax
- Epoxy coating minimum 250 microns according to EN 14901 GSK RAL certificate
- Product according to EN 1074-1 and 2; EN 1171
- Flange connection according to EN 1092-2 (DIN 2501) pressure PN10; PN16
- Face to face according to EN 558-A1 F5 (DIN 3202) – catalogue number 2903
- Face to face according to EN 558-A1 F4 (DIN 3202) – catalogue number 2901
- Product marking according to EN 19; EN 1074

Application:

Water and sewage networks and tanks. Transport of non agressive liquids.
Working conditions:
temp. up +70˚C
pressure up to 1,6 MPa

Test control:

Hydraulic test according to EN 1074-1; EN 1074-2; EN 12266-1
Seat: 1,1 x PN
Body: 1,5 x PN

Installation:

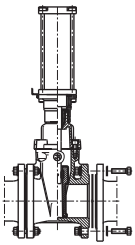

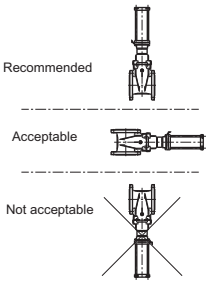

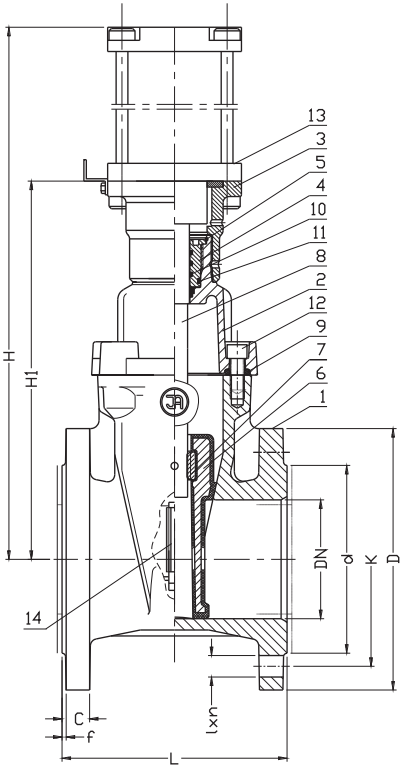

No.	Part	Standard execution
1	Body	Ductile cast iron EN-GJS-400-15 EN 1563 EN-GJS-500-7 EN 1563
2	Bonnet	Ductile cast iron EN-GJS-400-15 EN 1563 EN-GJS-500-7 EN 1563
3	Engine base	Ductile cast iron EN-GJS-400-15 EN 1563 EN-GJS-500-7 EN 1563
4	Packing cork	Brass CW617N EN 12165
5	Protection ring	Steel 1.1260
6, 14	Wedge + slider	Ductile cast iron EN-GJS-400-15 EN 1563 EN-GJS-500-7 EN 1563 Rubber EPDM or NBR EN ISO 1629 Tarnoform 300 EN ISO 1874-1
7	Spindle nut	Brass CW617N EN 12165 Ductile cast iron EN-GJS-400-15 EN 1563
8	Spindle	Stainless steel 1.4021 EN 10088-1
9	Body-bonnet gasket	Rubber EPDM or NBR EN ISO 1629
10 11	O-ring	Rubber EPDM or NBR EN ISO 1629
12	Screw	Steel Fe/Zn5 stainless steel EN ISO 4762
13	Actuator	Producer catalogue

- other material variants on special request

DN	2901 L	2903 L	H1	H	d	D	K PN16 (PN10)	l PN16 (PN10)	C	f	n PN16 (PN10)	Actuator
[mm]											-	-
40	140	240	219	417	84	150	110	19	19	3	4	60M2L100A0060
50	150	250	229	437	99	165	125	19	19	3	4	60M2L100A0070
65	170	270	257	475	118	185	145	19	19	3	4	60M2L100A0080
80	180	280	282	520	132	200	160	19	19	3	8	60M2L100A0100
100	190	300	319	599	156	220	180	19	19	3	8	60M2L125A0120
125	200	325	358	658	184	250	210	19	19	3	8	60M2L125A0140
150	210	350	434	784	211	285	240	23	19	3	8	40M2L160A0170
200	230	400	509	909	266	340	295	23	20	3	12 (8)	40M2L160A0220
250	250	450	603	1053	319	405	355 (350)	28 (23)	22	3	12	40M2L200A0270
300	270	500	678	1178	370	460	410 (400)	28 (23)	25	4	12	40M2L200A0320
350	290	550	827	1437	429	520	470 (460)	28 (23)	27	4	16	40M2L250A0400
400	310	600	1060	1730	480	580	525 (515)	31 (28)	28	4	16	40M2L320A0450

We reserve the rights to modify the production program and the given data without separate notices due to the permanent company development.

Resilient seated gate valve with electric actuator flanged

PN10
PN16

SEWAGE

WATER

Gate valve DN80

Horizontal and verical double spindle bearing

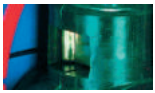

Replaceable wedge nut

Application of low friction sliding element

Product description (standard execution):

- Body bonnet and wedge made of ductile cast iron EN-GJS 400-15
- Monolithic ISO top flange
- Full bore gate valve
- NBR/EPDM fully vulcanised wedge
- Application of low friction sliding element
- Wedge nut made of forged brass - replaceable
- Stainless steel spindle with rolled thread
- Low friction double spindle bearing acting both horizontal and vertical way
- O-ring spindle sealing packing cork protected against contact with medium
- Forged packing cork protected against unscrewing
- Body bonnet Zinc coated screws protected by wax
- Epoxy coating minimum 250 microns according to EN 14901, GSK RAL certificate
- Product according to EN 1074-1, EN 1074-2; EN 1171
- Flange connection according to EN 1092-2 (DIN 2501) pressure PN10; PN16
- Flange for drive assembly in accordance with ISO 5210
- Face to face according to EN 558-A1 F5 (DIN 3202) – catalogue number 2902
- Face to face according to EN 558-A1 F4 (DIN 3202) – catalogue number 2911
- Product marking according to EN 19; EN 1074

Application:

Water and sewage networks and tanks. Transport of non agressive liquids.
Working conditions:
temp. up +70˚C
pressure up to 1,6 MPa

Test control:

Hydraulic test according to EN 1074-1; EN 1074-2; EN 12266-1
Seat: 1,1 xPN
Body: 1,5 x PN
Operation torque test.

Installation:

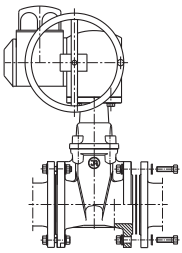

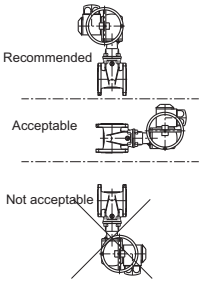

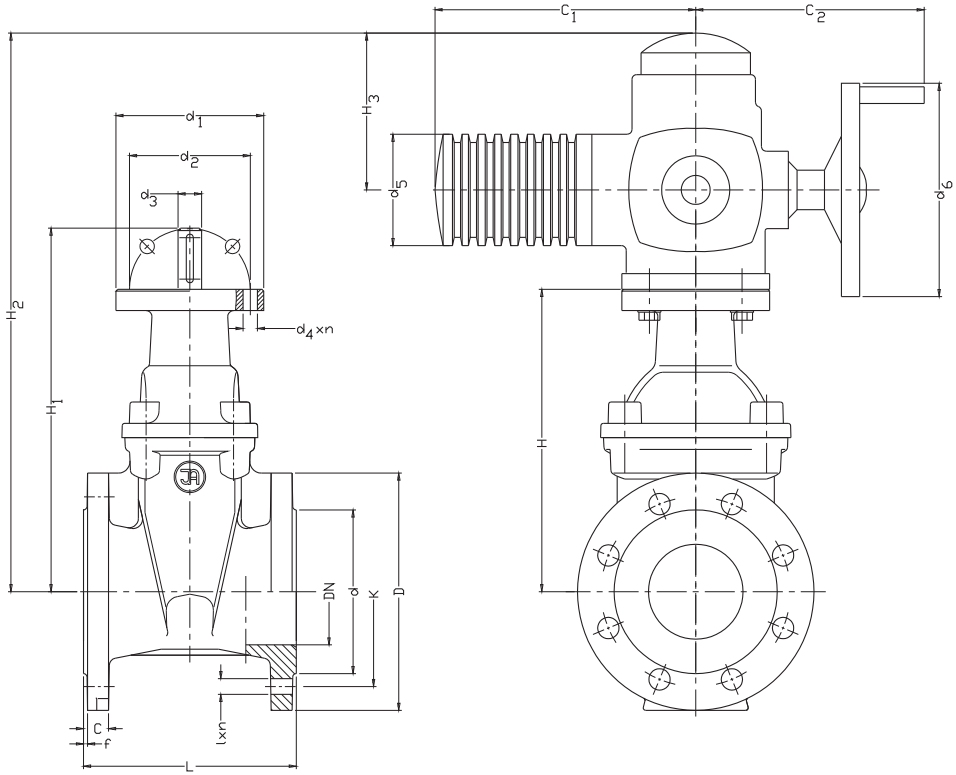

DN	2911 L	2902 L	C	f	D	d	K	l	n	C_1	C_2	d_1	d_2	d_3	d_4 x n	d_5	d_6	H	H_1	H_2	H_3	AUMA type of flange / Clamping force / number of turns			Weight 2911	Weight 2902
							PN16 (PN10)																			
			[mm]						-	[mm]												Saxx.x-Fx / [Nm] / ---			[kg]	
40	140	240	19	3	150	84	110	19	4	265	250	90	70	16	9x4	105	160	188	238	461	170	SA 7.2-F7	10-30	11	34	37
50	150	250	19	3	165	99	125	19	4	265	250	90	70	16	9x4	105	160	198	248	471	170	SA 7.2-F7	10-30	13,5	35	38
65	170	270	19	3	185	118	145	19	4	282	256	125	102	20	11x4	125	200	232	283	507	170	SA 7.6-F10	20-60	14	49	52
80	180	280	19	3	200	132	160	19	8	282	256	125	102	20	11x4	125	200	255	307	530	170	SA 7.6-F10	20-60	17	50	54
100	190	300	19	3	220	156	180	19	8	282	256	125	102	20	11x4	125	200	290	346	565	170	SA 7.6-F10	20-60	21	56	59
125	200	325	19	3	250	184	210	19	8	282	256	125	102	20	11x4	125	200	329	385	604	170	SA 10.2-F10	40-120	26	72	80
150	210	350	19	3	285	211	240	23	8	282	256	125	102	20	11x4	125	200	400	457	675	170	SA 10.2-F10	40-120	26	82	89
200	230	400	20	3	340	266	295	23	12 (8)	282	256	125	102	20	11x4	125	200	475	538	750	170	SA 10.2-F10	40-120	34,5	103	118
250	250	450	22	3	405	319	355 (350)	28 (23)	12	385	325	175	140	30	18x4	153	315	560	625	875	180	SA 14.2-F14	100-250	42,5	153	167
300	270	500	25	4	460	370	410 (400)	28 (23)	12	385	325	175	140	30	18x4	153	315	635	700	950	180	SA 14.2-F14	100-250	51	181	208
350	290	550	27	4	520	429	470 (460)	28 (23)	16	385	325	175	140	30	18x4	153	315	720	785	1033	180	SA 14.6-F14	300-500	60	276	314

We reserve the rights to modify the production program and the given data without separate notices due to the permanent company development.

Resilient seated gate valve with electric actuator flanged

PN10
PN16

SEWAGE

WATER

Gate valve DN500

Product description (standard execution):

- Body bonnet and wedge made of ductile cast iron EN-GJS 400-15
- Monolithic ISO top flange
- Full bore gate valve
- NBR/EPDM fully vulcanised wedge
- Application of low friction sliding element
- Wedge nut made of forged brass - replaceable
- Stainless steel spindle with rolled thread
- Low friction double spindle bearing acting both horizontal and vertical way
- O-ring spindle sealing packing cork protected against contact with medium
- Forged packing cork protected against unscrewing
- Body bonnet Zinc coated screws protected by wax
- Epoxy coating minimum 250 microns according to EN 14901, GSK RAL certificate
- Product according to EN 1074-1, EN 1074-2; EN 1171
- Flange connection according to EN 1092-2 (DIN 2501) pressure PN10; PN16
- Flange for drive assembly in accordance with ISO 5210
- Face to face according to EN 558-A1 F5 (DIN 3202) – catalogue number 2902
- Face to face according to EN 558-A1 F4 (DIN 3202) – catalogue number 2911
- Product marking according to EN 19; EN 1074

Application:

Water and sewage networks and tanks. Transport of non agressive liquids.
Working conditions:
temp. up +70˚C
pressure up to 1,6 MPa

Test control:

Hydraulic test according to EN 1074-1; EN 1074-2; EN 12266-1
Seat: 1,1 xPN
Body: 1,5 x PN
Operation torque test.

Installation:

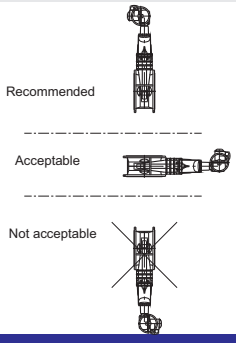

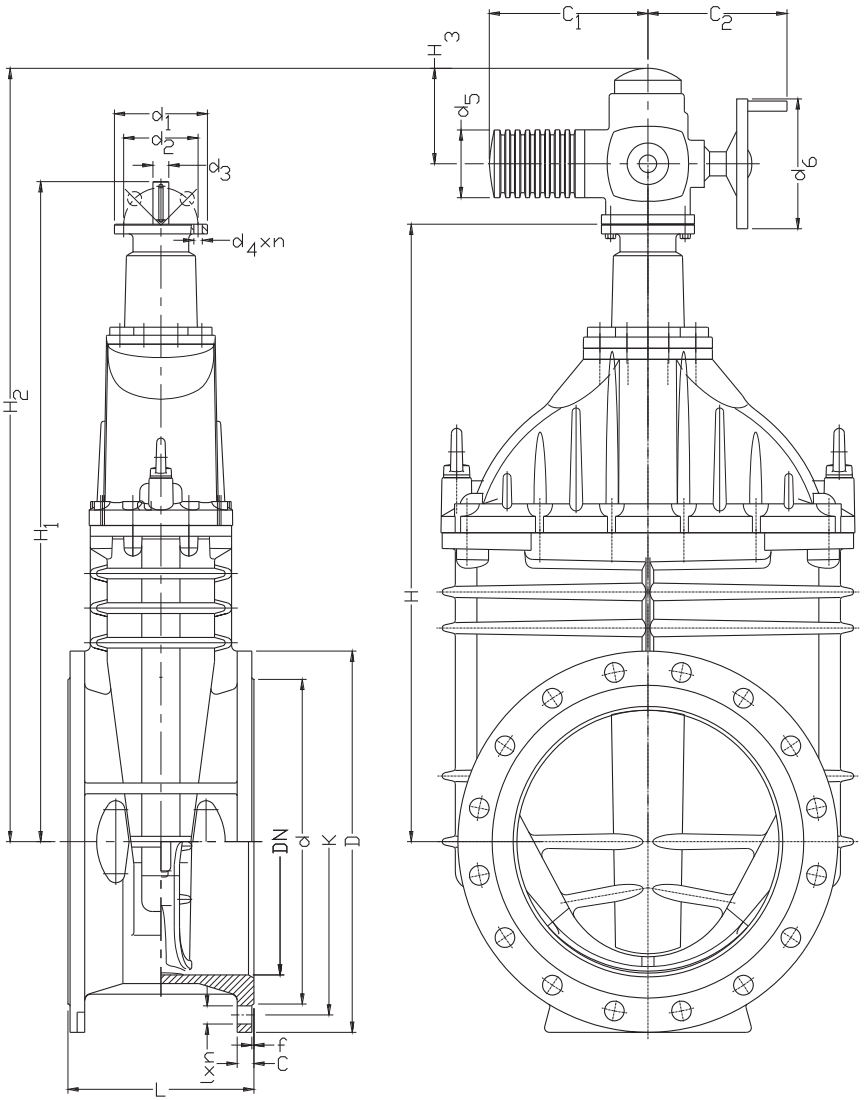

DN	2911 L	2902 L	C	f	D	d	K PN16 (PN10)	l	n	C_1	C_2	d_1	d_2	d_3	d_4 x n	d_5	d_6	H	H_1	H_2	H_3	AUMA type of flange / Clamping force / number of turns			Weight 2911	Weight 2902
[mm]									-	[mm]												Saxx.x-Fx / [Nm] / ---			[kg]	
400	310	600	28	4	580	480	525 (515)	31 (28)	16	385	332	175	140	30	18x4	153	400	980	1060	1268	180	SA 14.6-F14	300-500	58	356	385
450	330	-	30	4	640	548	585 (565)	31(28)	20	385	332	175	140	30	18x4	153	400	1050	1130	1340	180	SA 14.6-F14	300-500	65	452	-
500	350	700	32	4	715	582	650 (620)	34 (28)	20	385	332	175	140	30	18x4	153	400	1160	1240	1555	180	SA 14.6-F14	300-500	63	529	608
600	390	800	36	5	840	682	770 (725)	37 (31)	20	385	332	175	140	30	18x4	153	400	1330	1400	1650	180	SA 14.6-F14	300-500	77	708	845

We reserve the rights to modify the production program and the given data without separate notices due to the permanent company development.

Resilient seated gate valve with electric actuator flanged DN700-DN1200

PN10
PN16

SEWAGE

WATER

Gate valve DN700

Product description (standard execution):

- Body bonnet and wedge made of ductile cast iron EN-GJS 400-15
- Monolithic ISO top flange
- Full bore gate valve
- NBR/EPDM fully vulcanised wedge
- Application of low friction sliding element
- Wedge nut made of forged brass - replaceable
- Stainless steel spindle with rolled thread
- Low friction double spindle bearing acting both horizontal and vertical way
- O-ring spindle sealing packing cork protected against contact with medium
- Forged packing cork protected against unscrewing
- Body bonnet Zinc coated screws protected by wax
- Epoxy coating minimum 250 microns according to EN 14901
- Product according to EN 1074-1, EN 1074-2; EN 1171
- Flange connection according to EN 1092-2 (DIN 2501) pressure PN10; PN16
- Flange for drive assembly in accordance with ISO 5210
- Face to face according to EN 558-A1 F5 (DIN 3202) – catalogue number 2902
- Face to face according to EN 558-A1 F4 (DIN 3202) – catalogue number 2911
- Product marking according to EN 19; EN 1074

Application:

Water and sewage networks and tanks. Transport of non agressive liquids.
Working conditions:
temp. up +70˚C
pressure up to 1,6 MPa

Test control:

Hydraulic test according to EN 1074-1; EN 1074-2; EN 12266-1
Seat: 1,1 xPN
Body: 1,5 x PN
Operation torque test.

Installation:

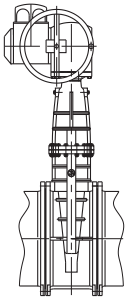

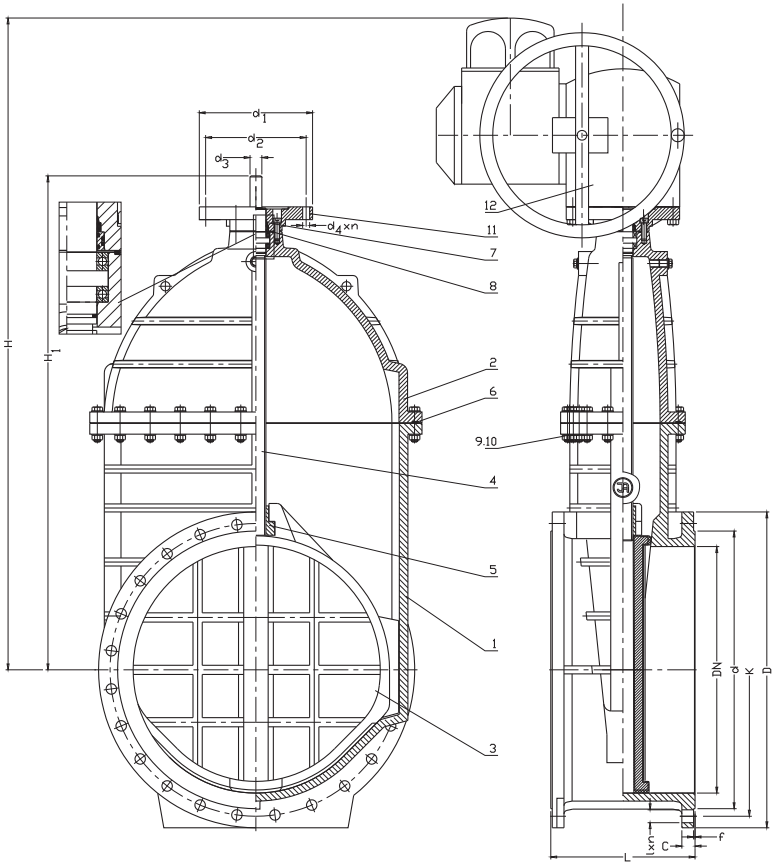

No.	Part	Material	No.	Part	Material
1	Body	Ductile cast iron EN-GJS-400-15, EN-GJS-500-7 EN 1563	7, 8	O-ring	Rubber NBR, EPDM ISO 1629
2	Bonnet	Ductile cast iron EN-GJS-400-15, EN-GJS 500-7 EN 1563	9	Screw	Stainless steel A2 EN ISO 4017
3	Wedge	Ductile cast iron EN-GJS-400-15, EN-GJS 500-7 EN 1563 Rubber NBR, EPDM ISO 1629	10	Screw stopper Washer	Stainless steel A4 EN ISO 4032 Stainless steel A2 EN ISO 7091
4	Spindle	Steel 1.4021 EN 10088-1	11	Drive connector	Ductile cast iron EN-GJS-400-15, EN-GJS-500-7 EN 1563
5	Spindle nut	BrassCW617N EN 12165	12	Electric actuator	Catalogue producer
6	Cleaning gasket	Rubber NBR, EPDM ISO 1629			

DN	2911 L	2902 L	H	H1	d PN16	D PN16 (PN10)	K PN16 (PN10)	l PN16 (PN10)	C	f	n PN16 (PN10)	d1	d2	d3	d4xn	Turns for full open	Weight 2911	Weight 2902
[mm]											-					-	[kg]	
700	430	900	1790	1414	794	910 (895)	840	37 (31)	40	5	24	210	165	50	4xØ22	52	840	960
800	470	1000	1875	1588	901	1025 (1015)	950	40 (34)	43	5	24	210	165	50	4xØ22	52	1160	1320
900	510	1100	2130	1745	1001	1125 (1115)	1050	40 (34)	47	5	28	210	165	50	4xØ22	58	1560	2000
1000	550	1200	2280	1931	1112	1255 (1230)	1170 (1160)	43 (37)	50	5	28	300	254	50	8xØ18	65	3020	3600
1200	630	1400	2725	2375	1328	1485 (1455)	1390 (1380)	49 (41)	57	5	32	300	254	70	8xØ18	78	4600	5000

We reserve the rights to modify the production program and the given data without separate notices due to the permanent company development.

Resilient seated gate valve with electric actuator flanged

PN25 | SEWAGE | WATER

Gate valve DN80

Horizontal and verical double spindle bearing

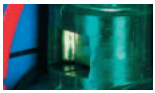

Replaceable wedge nut

Application of low friction sliding element

Product description (standard execution):

- Body bonnet and wedge made of ductile cast iron EN-GJS 400-15
- Monolithic ISO top flange
- Full bore gate valve
- NBR/EPDM fully vulcanised wedge
- Application of low friction sliding element
- Wedge nut made of forged brass - replaceable
- Stainless steel spindle with rolled thread
- Low friction double spindle bearing acting both horizontal and vertical way
- O-ring spindle sealing packing cork protected against contact with medium
- Forged packing cork protected against unscrewing
- Body bonnet Zinc coated screws protected by wax
- Epoxy coating minimum 250 microns according to EN 14901, GSK RAL certificate
- Product according to EN 1074-1, EN 1074-2; EN 1171
- Flange connection according to EN 1092-2 (DIN 2501) pressure PN25
- Flange for drive assembly in accordance with ISO 5210
- Face to face according to EN 558-A1 F5 (DIN 3202) – catalogue number 2902
- Face to face according to EN 558-A1 F4 (DIN 3202) – catalogue number 2911
- Product marking according to EN 19; EN 1074

Application:

Water and sewage networks and tanks. Transport of non agressive liquids.
Working conditions:
temp. up +70˚C
pressure up to 1,6 MPa

Test control:

Hydraulic test according to EN 1074-1; EN 1074-2; EN 12266-1
Seat: 1,1 xPN
Body: 1,5 x PN
Operation torque test.

Installation:

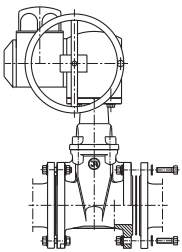

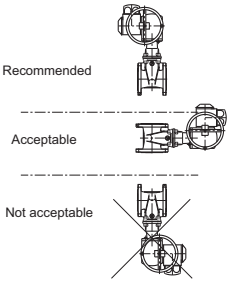

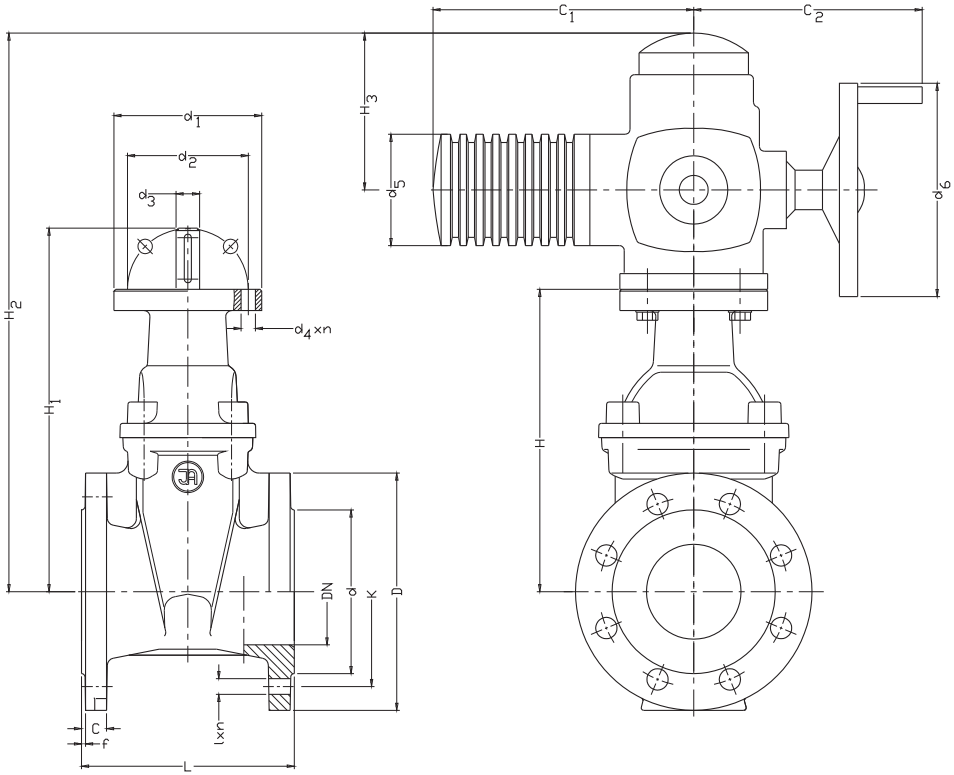

DN	2911 L	2902 L	C	f	D	d	K	l	n	C_1	C_2	d_1	d_2	d_3	$d_4 \times n$	d_5	d_6	H	H_1	H_2	H_3	AUMA type of flange / Clamping force / number of turns		
[mm]									-	[mm]												Saxx.x-Fx / [Nm] / ---		
40	140	240	19	3	150	84	110	19	4	265	250	90	70	16	9x4	105	160	188	238	461	170	SA 7.2-F7	10-30	11
50	150	250	19	3	165	99	125	19	4	265	250	90	70	16	9x4	105	160	198	248	471	170	SA 7.2-F7	10-30	13,5
65	170	270	19	3	185	118	145	19	4	282	256	125	102	20	11x4	125	200	232	283	507	170	SA 7.6-F10	20-60	14
80	180	280	19	3	200	132	160	19	8	282	256	125	102	20	11x4	125	200	255	307	530	170	SA 7.6-F10	20-60	17
100	190	300	19	3	235	156	190	23	8	282	256	125	102	20	11x4	125	200	290	346	565	170	SA 7.6-F10	20-60	21
125	200	325	19	3	270	184	220	28	8	282	256	125	102	20	11x4	125	200	329	385	604	170	SA 10.2-F10	40-120	26
150	210	350	20	3	300	211	250	28	8	282	256	125	102	20	11x4	125	200	400	457	675	170	SA 10.2-F10	40-120	26
200	230	400	22	3	360	274	310	28	12	282	256	125	102	20	11x4	125	200	475	538	750	170	SA 10.2-F10	40-120	34,5
250	250	450	25	3	425	330	370	31	12	385	325	175	140	30	18x4	153	315	560	625	875	180	SA 14.2-F14	100-250	42,5
300	270	500	28	4	485	389	430	31	16	385	325	175	140	30	18x4	153	315	635	700	950	180	SA 14.2-F14	100-250	51
350	290	550	30	4	555	448	490	34	16	385	325	175	140	30	18x4	153	315	720	785	1033	180	SA 14.6-F14	300-500	60

We reserve the rights to modify the production program and the given data without separate notices due to the permanent company development.

Resilient seated gate valve with electric actuator flanged

PN25 | SEWAGE | WATER

Gate valve DN500

Product description (standard execution):

- Body bonnet and wedge made of ductile cast iron EN-GJS 400-15
- Monolithic ISO top flange
- Full bore gate valve
- NBR/EPDM fully vulcanised wedge
- Application of low friction sliding element
- Wedge nut made of forged brass - replaceable
- Stainless steel spindle with rolled thread
- Low friction double spindle bearing acting both horizontal and vertical way
- O-ring spindle sealing packing cork protected against contact with medium
- Body bonnet Zinc coated screws protected by wax
- Epoxy coating minimum 250 microns according to EN 14901
- Product according to EN 1074-1, EN 1074-2; EN 1171
- Flange connection according to EN 1092-2 (DIN 2501) pressure PN25
- Flange for drive assembly in accordance with ISO 5210
- Face to face according to EN 558-A1 F5 (DIN 3202) – catalogue number 2902
- Face to face according to EN 558-A1 F4 (DIN 3202) – catalogue number 2911
- Product marking according to EN 19; EN 1074

Application:

Water and sewage networks and tanks. Transport of non agressive liquids.
Working conditions:
temp. up +70˚C
pressure up to 1,6 MPa

Test control:

Hydraulic test according to EN 1074-1; EN 1074-2; EN 12266-1
Seat: 1,1 xPN
Body: 1,5 x PN
Operation torque test.

Installation:

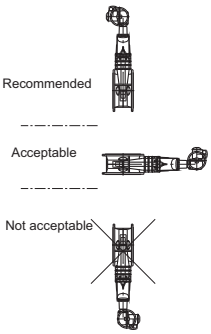

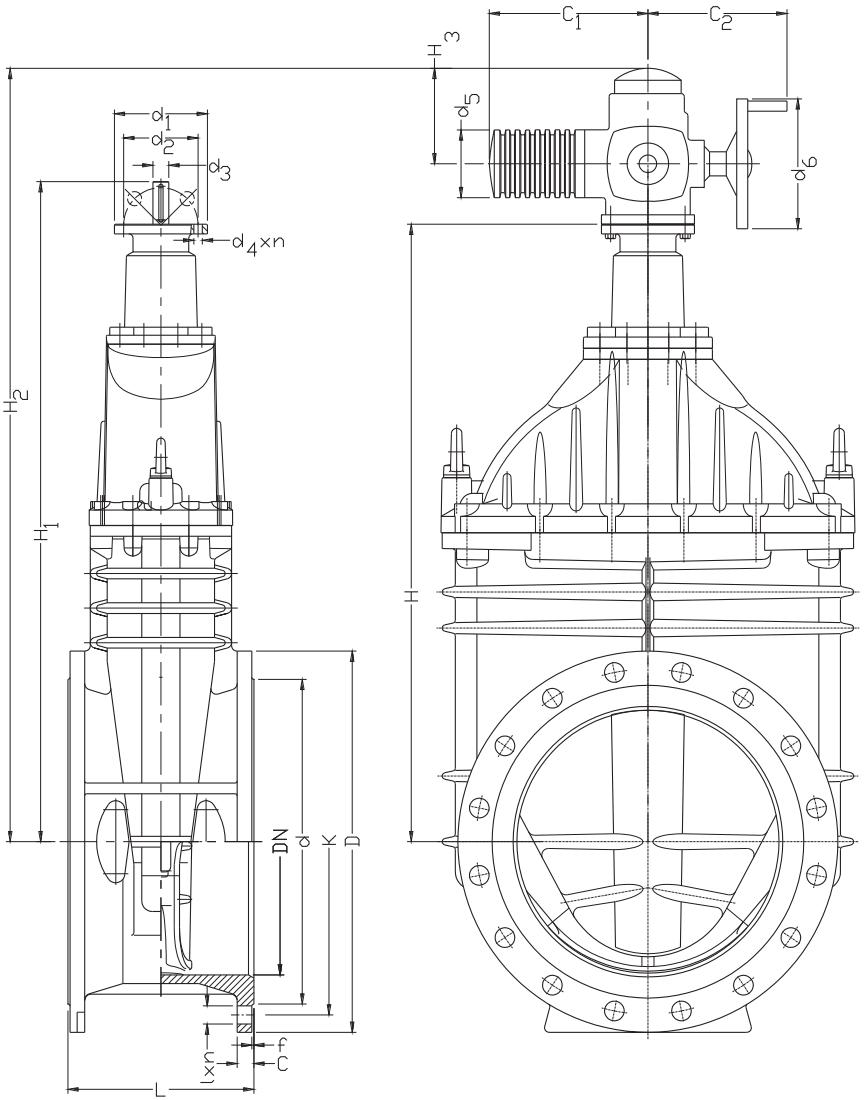

DN	2911 L	2902 L	C	f	D	d	K	l	n	C_1	C_2	d_1	d_2	d_3	d_4 x n	d_5	d_6	H	H_1	H_2	H_3	AUMA type of flange / Clamping force / number of turns		
[mm]									-	[mm]												Saxx.x-Fx / [Nm] / ---		
400	310	600	32	4	620	503	550	37	16	385	332	175	140	30	18X4	153	400	980	1060	1268	180	SA 14.6-F14	300-500	58
450	330	-	35	4	670	548	600	37	20	385	332	175	140	30	18X4	153	400	1050	1130	1340	180	SA 14.6-F14	300-500	65
500	350	700	37	4	730	609	660	37	20	385	332	175	140	30	18X4	153	400	1160	1240	1555	180	SA 14.6-F14	300-500	63

We reserve the rights to modify the production program and the given data without separate notices due to the permanent company development.

Knife gate valve with electric actuator
interflange

PN10
PN16

SEWAGE

Product description (standard execution):

- Bidirectional tightness
- Knife circumferential seal profile with steel insert
- Knife cleaning scrapers
- Ductile cast iron monolithic body EN-GJS 400-15
- Stainless steel 1.4021 spindle with rolled thread
- Low friction spindle bearing by plastic and brass plain washers
- Gland sealing – o-ring NBR and non-asbestos cord
- Spindle nut made of bronze
- Epoxy coating minimum 250 microns according to EN 14901
- Stainless steel bolts and washers
- Product according to EN 1074-1, EN 1074-2; EN 1171
- Flange connection according to EN 1092-2 (DIN 2501) pressure PS2,5; PS6; PS10
- ISO top flange 5211
- Face to face according to producer documentation JAFAR
- Product marking according to EN 19; EN 1074

Application:

Water and sewage networks and tanks; pulverized products, transport of non agressive liquids.
Working conditions:
temp. up +70˚C
pressure up to 1,0 MPa

Test control:

Hydraulic test according to EN 1074-1; EN 1074-2; EN 12266-1
Seat: 1,1 xPN
Body: 1,5 x PN
Operation torque test.

Installation:

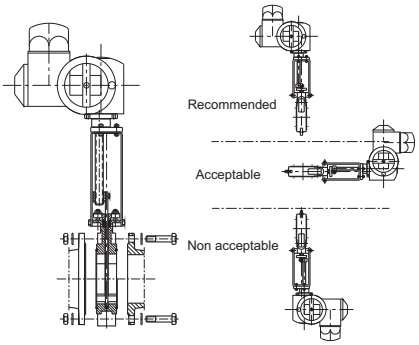

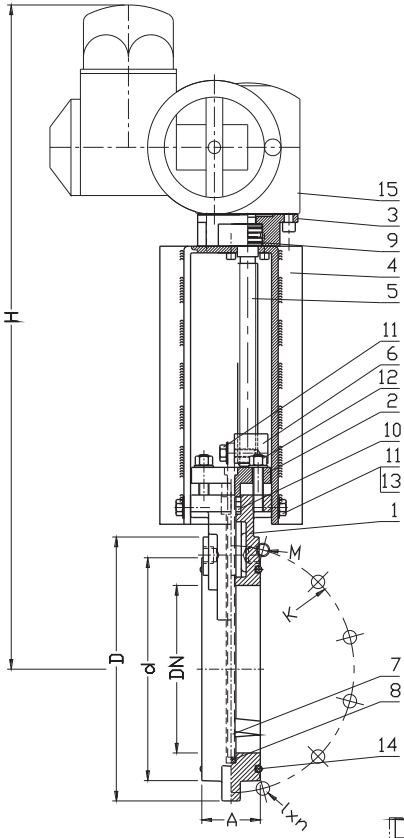

Standard: DN50 to DN500 - non-rising or rising spindle
DN600 to DN1000 - rising spindle

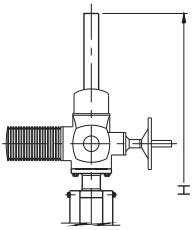

Standard: DN500 to DN1000 - - rising spindle

No.	Part	Standard execution
1	Body	Ductil cast iron EN-GJS-400-15 EN 1563
2	Clamping plate	Ductil cast iron EN-GJS-400-15 EN 1563
3	Engine base	Steel 1.0038 EN 10025-2
4	Pillar	Steel 1.0038 EN 10025-2
5	Spindle	Stainless steel 1.4021, 1.4301* EN 10088-1
6	Spindle nut	Bronze CW306G EN 12163
7	Knife	Stainless steel 1.4301, 1.4571* EN 10088-1
8	Gasket	Rubber NBR EN ISO 1629:
9	Bushing	Producer catalogue
10	Gland seal	PACKAGE: Rubber NBR, EN- SO 1629 with non-asbestos cord
11	Screw	Stainless steel A2 EN ISO 4014
12	Nut	Stainless steel A4 EN ISO 4032
13	Washer	Stainless steel A2 EN ISO 7091
14	Seal o-ring	Rubber NBR EN ISO 1629
15	Electric actuator	Producer catalogue

* - material version on enquiry

DN	PN	PS	K	D	d	I x n	M x n	A wg. rys.	H rising (non-rising)	Actuator	Flange connections	Turn for full open	Weight
[mm]	[bar]		[mm]										[kg]
50	10-16	10	125	165	99	-	M16x4	48	551	SA 7.2	F10	14	25
65	10-16	10	145	185	118	-	M16x4	48	582	SA 7.2	F10	18	29
80	10-16	10	160	200	132	Ø19x6	M16x2	52	598	SA 7.2	F10	22	30
100	10-16	10	180	220	156	Ø19x6	M16x2	52	632	SA 7.2	F10	27	32
125	10-16	10	210	250	184	Ø19x6	M16x2	56	684	SA 7.2	F10	33	38
150	10-16	10	240	285	212	Ø23x6	M20x2	56	740	SA 7.6	F10	32	41
200	10	10	295	340	266	Ø23x6	M20x2	70	830	SA 7.6	F10	42	58
250	10	10	350	395	319	Ø23x8	M20x4	70	930	SA 10.2	F10	52	72
300	10	10	400	445	370	Ø23x8	M20x4	76	1100	SA 10.2	F10	62	86
350	10	10	460	505	430	Ø23x10	M20x6	76	1180	SA 10.2	F10	72	106
400	10	10	515	565	480	Ø28x10	M24x6	86	1286	SA 10.2	F10	68	146
500	10	6	620	670	582	Ø28x12	M24x8	114	1560(1760)	SA 14.6	F14	85	282
600	10	6	725	780	682	Ø31x12	M27x8	114	1785(2100)	SA 14.6	F14	102	332
700	10	2,5	840	895	794	Ø31x14	M27x10	165	2500	SA 16.2	F16	118	637
800	10	2,5	950	1015	901	Ø34x14	M30x10	190	2260(2860)	SA 16.2	F16	116	763
900	10	2,5	1050	1115	1001	Ø34x16	M30x12	203	3070	SA 16.2	F16	115	933
1000	10	2,5	1160	1230	1112	Ø37x16	M33x12	216	3650(3430)	SA 16.2	F16	127	1233

We reserve the rights to modify the production program and the given data without separate notices due to the permanent company development.

Knife gate valve with pneumatic actuator
interflange

PN10

SEWAGE

Knife gate valve DN80

Product description (standard execution):

- Ductile cast iron monolithic body EN-GJS 400-15
- The shape of the chamber makes it possible to remove any impurities in the final phase of the closure
- Air pressure controlling the 6 Bar actuator
- Knife cleaning scrapers
- Gland sealing – o-ring NBR and non-asbestos cord
- Knife circumferential seal profile with steel insert
- Bidirectional tightness
- Epoxy coating minimum 250 microns according to EN 14901
- Stainless steel bolts and washers
- Product according to EN 1074-1, EN 1074-2, EN 1171
- Flange connection according to EN 1092-2 (DIN 2501), pressure PS2,5; PS6; PS10
- Face to face according to producer documentation JAFAR
- Product marking according to EN 19; EN 1074

Application:

Water and sewage networks and tanks; pulverized products, transport of non agressive liquids.
Working conditions:
temp. up +70˚C
pressure up to 1,0 MPa

Test control:

Hydraulic test according to EN 1074-1; EN 1074-2; EN 12266-1
Seat: 1,1 xPN
Body: 1,5 x PN
Operation torque test.

Installation:

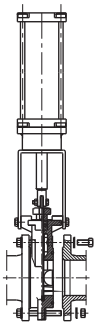

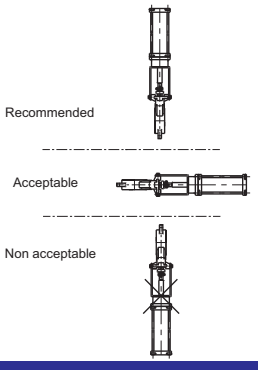

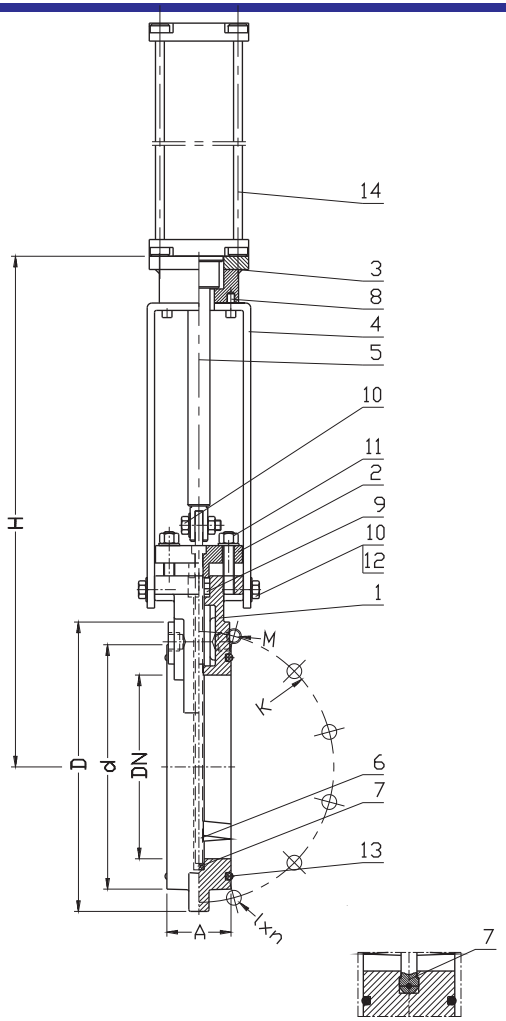

No.	Part	Standard execution
1	Body	Ductile cast iron EN-GJS-400-15 EN 1563
2	Clamping plate	Ductile cast iron EN-GJS-400-15 EN 1563
3	Engin base	Steel 1.0038 EN 10025-2
4	Pillar	Steel 1.0038 EN 10025-2
5	Actuator spindle	Stainless steel 1.4057 EN 10088-1
6	Knife	Stainless steel 1.4301 EN 10088-1
7	Gasket	Rubber NBR EN-ISO 1629
8, 10	Screw	Stainless steel A2 EN ISO 4014
9	Gland seal	PACKAGE: Rubber NBR, EN-ISO 1629 with non-asbestos cord
11	Nut	Stainless steel A4 EN ISO 4032
12	Washer	Stainless steel A2 EN ISO 7091
13	O-ring	Rubber NBR EN-ISO 1629
14	Pneumatic actuator	Producer catalogue CAMOZZI

DN	PN	PS	K	D	d	l x n	M x n	A		H	Pneumatic actuator CAMOZZI
								by. drawing	row 20		
[mm]	[bar]		[mm]								
50	10 / 16	10	125	165	99	-	M16x4	48	-	290	60M2L100A0060(49)
65	10 / 16	10	145	185	118	-	M16x4	48	-	330	60M2L100A0070(49)
80	10 / 16	10	160	200	132	Ø19x6	M16x2	52	-	350	60M2L100A0080(49)
100	10 / 16	10	180	220	156	Ø19x6	M16x2	52	52	385	60M2L125A0120(36)
125	10 / 16	10	210	250	184	Ø19x6	M16x2	56	56	445	60M2L125A0140(36)
150	10 / 16	10	240	285	212	Ø23x6	M20x2	56		530	40M2L160A0170(33)
200	10	10	295	340	266	Ø23x6	M20x2	70	-	600	40M2L160A0220(33)
250	10	10	350	395	319	Ø23x8	M20x4	70	-	720	40M2L200A0270(33)
300	10	10	400	445	370	Ø23x8	M20x4	76	-	830	40M2L200A0320(33)
350	10	10	460	505	430	Ø23x10	M20x6	76	-	920	40M2L250A0400(95)
400*	10	10	515	565	480	Ø28x10	M24x6	86	-	1030	40M2L320A0450(59)
500*	10	6	620	670	582	Ø28x12	M24x8	114	-	1260	40M2L320A0550(52)

* - On request

We reserve the rights to modify the production program and the given data without separate notices due to the permanent company development.

Clamp saddle

PN16

WATER

Saddle 3050

Saddle 3100

Product description (standard execution):

- Full bore
- Body made of ductile cast iron EN-GJS 400-15
- Gasket sealing between tube and saddle body
- Gasket positioner against wrong assembling
- Under pressure instalation (shut valve and drilling machine required)
- Thread connection 2" according to EN ISO 228-1. Working pressure PN16 for DN50 (fig 3100)
- Flange connection according to EN 1092-2 (DIN 2501) pressure PN16 (fig 3050)
- Epoxy coating minimum 250 microns according to EN 14901 GSK RAL certificate
- Face to face according to the producer documentation JAFAR
- Product marking according to EN-19; EN-1074

Application:

Water and sewage networks and tanks. Transport of non agressive liquids.
Working conditions:
temp. up +70˚C
pressure up to 1,6 MPa

Test control:

Water pressure test according to EN 1074-1; EN 1074-2;
EN 12266-1
Body: 1,5 x PN

Execution variant:

Ductile cast iron EN-GJS 500-7

Installation:

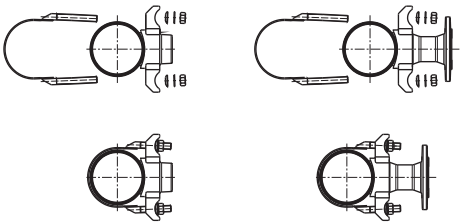

3050

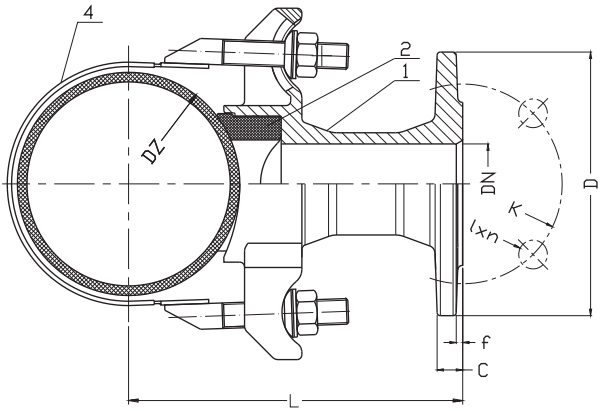

No.	Part	Standard execution
3050, 3100		
1	Body	Ductile cast iron EN-GJS-400-15 EN 1563
2	Pipe gasket	Rubber EPDM EN ISO 1629
3	Socket gasket	Rubber EPDM EN ISO 1629
3330		
4*	Pipe strap	Stainless steel EN 10088-1 Rubber EPDM EN ISO 1629

* - Equipment available,together or separately
- other material variants on special request

DN	K	Dz	D	l x n	L_2	C	f	Strap quantity
[mm]								[pcs]
50	125	88-738	165	19x4	140+Dz/2	16	3	1
80	160	125-700	200	19x8	135+Dz/2	17	3	2
100	180	150-500	220	19x8	135+Dz/2	17	3	2
100	180	500-800	220	19x8	135+Dz/2	17	3	2
150	240	300-500	300	23x8	135+Dz/2	19	3	3
150	240	500-900	300	23x8	135+Dz/2	19	3	3

3100

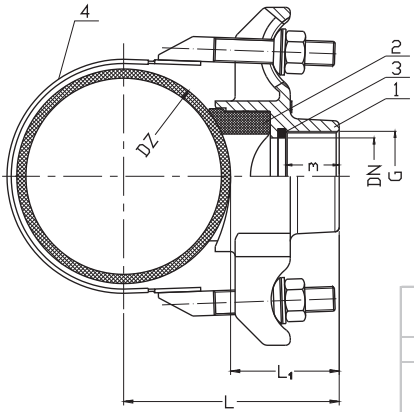

DN	G	m	Dz	L	L_1	Strap quantity
[mm]	[cal]	[mm]				[pcs]
50	2"	40	88-738	L_1+Dz/2	85+Dz/2	1

We reserve the rights to modify the production program and the given data without separate notices due to the permanent company development.

Gate valve
soft seated with threaded ends

PN16

WATER

Gate valve 3116 DN32

Gate valve 3126 DN50

Packing cork protected against unscrewing and fully covered by additional cleaning gasket

Horizontal and vertical double spindle bearing

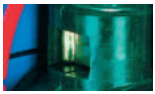

Replaceable wedge nut

Application of low friction sliding element

Product description (standard execution):

- Body bonnet and wedge made of ductile cast iron EN-GJS 400-15
- Full bore gate valve
- Outside and inside full vulcanized wedge by NBR EPDM; DN25 and DN32 made of brass EN 12165
- Forged replaceable wedge nut made of brass for gate valve DN40 and DN50
- Application of low friction sliding element for DN40 and DN50
- Stainless steel spindle with rolled thread
- Low friction double spindle bearing both horizontal and vertical way
- O-ring spindle sealing packing cork protected against medium
- Under pressure replaceable packing cork
- Forged packing cork protected against unscrewing
- Packing cork protected against dirt penetration
- Body bonnet Zinc coated screws protected by wax
- Epoxy coating minimum 250 microns according to EN 14901 GSK RAL certificate
- Article according to EN 1074-1, EN 1074-2
- Threaded connection according to EN ISO 228-1 pressure PN10; PN16
- Face to face according to producer documentation JAFAR
- Product marking according to EN 19; EN 1074

Application:

Water networks and tanks. Transport of non agressive liquids.
Working conditions:
temp. up +70˚C
pressure up to 1,6 MPa

Execution variant:

Ductile cast iron EN-GJS 500-7
SS body bonnet screws

Test control:

Hydraulic test according to EN 1074-1, EN 1074- 2; EN 12266-1
Seat 1,1 x PN
Body 1,5 x PN

Installation:

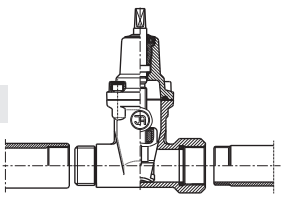

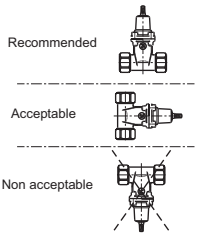

Accessories:

Extension spindle - see: 9010, 9011
Street box - see: 9501 9503 9504 9509

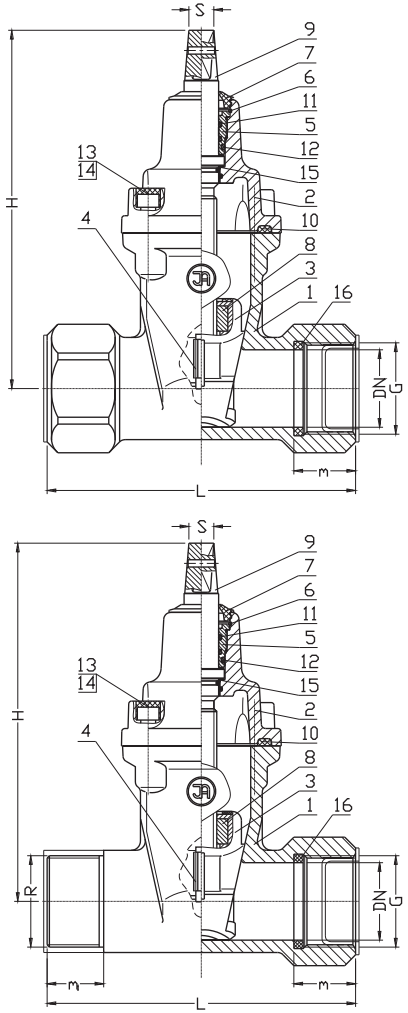

No.	Part	Standard execution
1	Body	Ductile cast iron EN-GJS 400-15 EN 1563
2	Bonnet	Ductile cast iron EN-GJS 400-15 EN 1563
3	Wedge	Brass CW617N (DN25-DN32) EN 12165 Ductile cast iron (DN40-DN50) EN-GJS 400-15; EN 1563 Rubber EPDM NBR PN ISO 1629
4	Wedge slider	Tarnoform 300 EN ISO 1874-1
5	Packing cork	Brass CW617N EN 12165
6	Protection ring	Steel 1.1260 EN-74/H-84032
7	Cleaning gasket	Rubber EPDM NBR EN ISO 1629
8	Spindle nut	Brass CW617N EN 12165
9	Spindle	Stainless steel 1.4021 EN 10088-1
10	Body-bonnet gasket	Rubber EPDM NBR EN ISO 1629
11 12	O-ring	Rubber EPDM NBR EN ISO 1629
13	Screw	Steel Fe/Zn5, stainless steel EN ISO 4762
14	Screw stopper	Wax
15	Washer	Tarnoform 300 EN ISO 1874-1
16	Gasket	Rubber EPDM NBR ISO 1629

- other material variants on special request

DN	G / R	L	m	m_1	H	S	Weight	
[mm]	[cal]	[mm]					3116 [kg]	3126 [kg]
25	1" / 1"	105	25	40	160	12	2,6	2,6
32	5/4" / 5/4"	120	25	40	160	12	2,9	2,8
32	5/4" / 2"	130	25	40	160	12	-	2,7
40	6/4" / 6/4"	180	40	40	215	14	6,1	5,6
40	6/4" / 2"	180	40	40	215	14	-	5,8
50	2" / 2"	200	40	40	225	14	6,9	6,6

We reserve the rights to modify the production program and the given data without separate notices due to the permanent company development.

Connectors
for water line networks

PN16

WATER

Connectors 3150

Connectors 3160

Connectors 3151

Product description (standard execution):

- Body made of ductile cast iron EN-GJS 400-15
- Full bore
- Rubber gasket sealing between tube and connector body
- Fig 3150 (with 2 stainless steel screws) for PE and PVC pipes
- Fig 3160 (with 4 stainless steel screws) for PE and PVC pipes
- Article according to EN 1074-1, EN 1074-2
- Face to face according to the producer documentation JAFAR
- Thread connection 2" according to EN ISO 228-1. Working pressure PN10 and PN16
- Epoxy coating minimum 250 microns according to EN 14901 GSK RAL certificate
- Product marking according to EN 19; EN 1074

Application:

Water and sewage networks and tanks. Transport of non agressive liquids.
Working conditions:
temp. up +70˚C
pressure up to 1,6 MPa

Test control:

Water pressure test according to EN 1074-1; EN 1074-2;
EN 12266-1
Body: 1,5 x PN

Execution variant:

Ductile cast iron EN-GJS 500-7
Stainless steel screws

Installation:

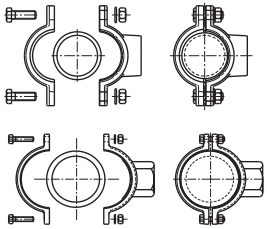

3150

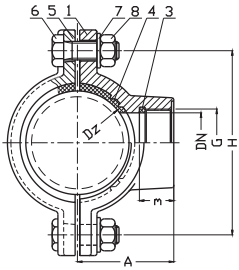

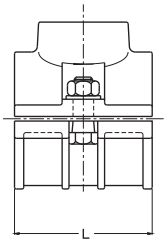

3160

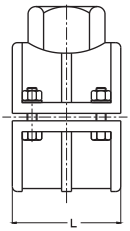

No.	Part	Standard execution
3150, 3160, 3151		
1	Body	Ductile cast iron EN-GJS-400-15 EN 1563
2	Seal the tube	Rubber EPDM EN ISO 1629
3	Seal the tube	Rubber EPDM EN ISO 1629
4	Seal the tube	Rubber EPDM EN ISO 1629
5	Connectors	Ductile cast iron EN-GJS-400-15 EN 1563
6	Screw	Stainless steel A2 EN ISO 4014
7	Washer	Stainless steel A2 EN ISO 7091
8	Nut	Stainless steel A4 EN ISO 4032

- other material variants on special request

DN	G	Dz	m	A	H	Weight	Quality	L
[mm]	[cal]	[mm]				[kg]	[pcs]	[mm]
3150								
50	2"	63	40	80	132	3,5	2	120
50	2"	90	40	94	160	4,4	2	120
50	2"	110	40	104	180	5,0	2	120
50	2"	160	40	132	225	6,8	2	120
50	2"	200	40	150	270	9,3	2	120
50	2"	225	40	162	300	10,4	2	120
3160								
50	2"	90	40	90	138	2,6	4	100
50	2"	110	40	100	163	3,3	4	110
50	2"	125	40	112	176	4,1	4	110
50	2"	160	40	129	204	4,7	4	128
50	2"	180	40	142	230	5,2	4	128
50	2"	225	40	151	280	9,0	4	180
50	2"	250	40	163	320	9,8	4	180
50	2"	280	40	178	340	10,6	4	180
50	2"	315	40	196	370	16,7	4	180

3151

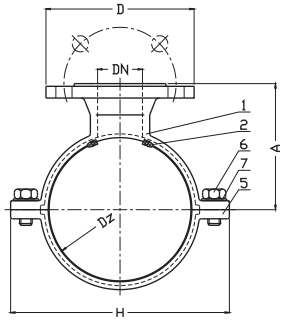

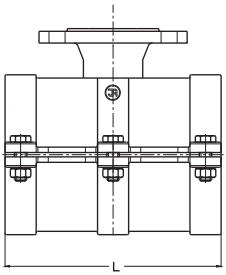

DN	Dz	H	A	D	L
[mm]					
3151					
50	63	129	140	165	90
50	75	141	140	165	115
50	90	161	145	165	180
50	110	189	140	165	200
80	110	189	170	200	200
50	125	204	160	165	200
80	125	204	170	200	200
50	140	219	160	165	200
80	140	219	170	200	200
100	140	219	180	220	200
50	160	239	170	165	250
80	160	239	200	200	250
100	160	239	205	220	250
50	180	259	195	165	250
80	180	259	225	200	250
100	180	259	230	220	250
50	200	279	195	165	250
80	200	279	225	200	250
100	200	279	230	220	250
50	219,1	298	195	165	250
80	219,1	298	225	200	250
100	219,1	298	230	220	250
50	225	304	205	165	250
80	225	304	225	200	250
100	225	304	230	220	250
50	250	345	250	165	300
80	250	345	250	200	300
100	250	345	255	220	300
150	250	345	265	285	300
50	280	376	260	165	300
80	280	376	265	200	300
100	280	376	270	220	300
150	280	376	280	285	300
50	315	411	290	165	300
80	315	411	295	200	300
100	315	411	300	220	300
150	315	411	310	285	300
50	400	496	340	165	300
80	400	496	350	200	300
100	400	496	360	220	300
150	400	496	370	285	300

We reserve the rights to modify the production program and the given data without separate notices due to the permanent company development.

Connector set
for hard pipes

PN16

WATER

3216 + 3330

Connector set DN50

Packing cork protected against
nscrewing and fully covered by
dditional cleaning gasket

orizontal and vertical
ouble spindle bearing

eplaceable wedge nut

Application of low friction
sliding element

Product description (standard execution):

- Body bonnet and wedge made of ductile cast iron EN-GJS 400-15
- Full bore gate valve
- NBR/EPDM fully vulcanised wedge DN32 made of brass EN 12165
- Wedge nut made of forged brass - replaceable
- Application of low friction sliding element for DN50
- Stainless steel spindle with rolled thread
- Low friction double spindle bearing acting both horizontal and vertical way
- O-ring spindle sealing packing cork protected against contact with medium
- Under pressure replaceable packing cork DN50
- Forged packing cork protected against unscrewing
- Packing cork protected against dirt penetration
- Rubber gasket sealing between tube and connector body
- Body bonnet Zinc coated screws protected by wax
- Easy clamp assembling with the connector jaw
- Gasket positioner against wrong assembling
- Acid resistant steel pipe strap
- Stainless steel clamp screws
- Epoxy coating minimum 250 microns according to EN 14901 GSK RAL certificate
- Article according to EN 1074-1;EN 1074-2
- Face to face according to producer documentation JAFAR
- Product marking according to EN 19; EN 1074

Application:

Water and sewage networks and tanks. Transport of non agressive liquids.
Working conditions:
temp. up +70˚C

Test control:

Water pressure test according to EN 1074-1; EN 1074- 2; EN 12266-1
Seat 1,1 x PN
Body 1,5 x PN
Operation torque test

Accessories:

Extension spindle - see: 9010, 9011
Street box - see: 9501, 9503, 9504, 9509

Execution variant:

Ductile cast iron EN-GJS 500-7
Connecting screws made of stainless steel

Instalation:

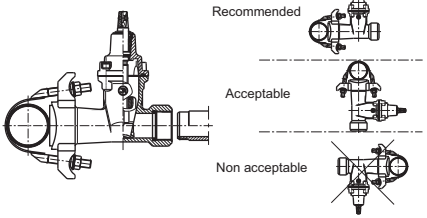

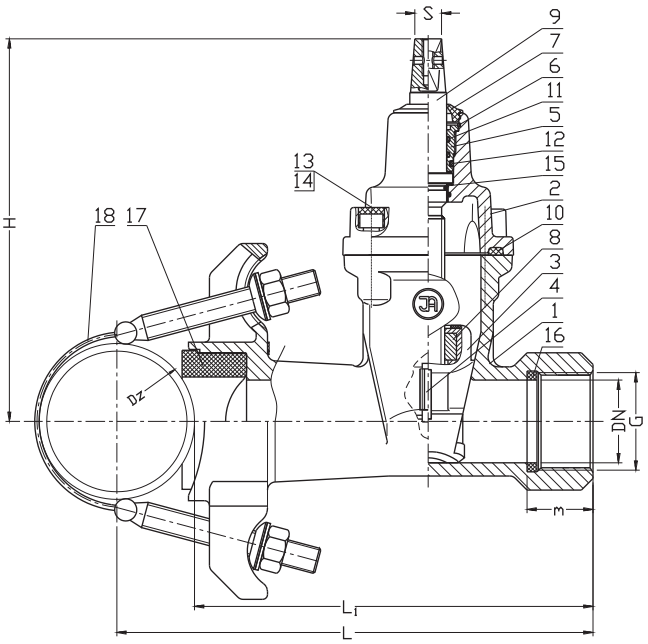

No.	Part	Standard execution
1	Body	Ductile cast iron EN-GJS-400-15 EN 1563
2	Bonnet	Ductile cast iron EN-GJS-400-15 EN 1563
3	Wedge	Brass CW617N DN32 EN 12165 Ductile cast iron DN50 EN-GJS-400-15 EN 1563 Rubber EPDM NBR EN SO 1629
4	Wedge slider	Tarnoform 300 EN ISO 1874-1
5	Packing cork	Brass CW617N EN 12165
6	Protection ring	Steel 1.1260
7	Cleaning gasket	Rubber EPDM NBR EN ISO 1629
8	Spindle nut	Brass CW617N EN 12165
9	Spindle	Steel 1.4021 EN 10088-1
10	Bonnet gasket	Rubber EPDM NBR EN ISO 1629
11 12	O-ring	Rubber EPDM NBR EN ISO 1629
13	Screw	Steel Fe/Zn5 stainless steel EN ISO 4762
14	Screw stopper	Wax
15	Washer	Tarnoform 300 EN ISO 1874-1
16 17	Pipe gasket	Rubber EPDM NBR EN ISO 1629
18	Pipe strap	Stainless steel EN 10088-1 Rubber EPDM NBR EN ISO1629

DN	G	Dz	L	L_1	m	H	S	Weight
[mm]	[cal]	[mm]						[kg]
32	5/4"	88-738	L_1+Dz/2	205	25	160	12	6,8
50	2"		L_1+Dz/2	260	40	225	14	11,7

We reserve the rights to modify the production program and the given data without separate notices due to the permanent company development.

Connector set
for soft pipes PE and PVC

PN10
PN16

WATER

Connector set DN50

Packing cork protected against unscrewing and fully covered by additional cleaning gasket

Horizontal and vertical double spindle bearing

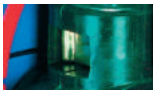

Replaceable wedge nut

Application of low friction sliding element

Product description (standard execution):

- Body bonnet and wedge made of ductile cast iron EN-GJS 400-15
- Full bore gate valve
- NBR/EPDM fully vulcanised wedge; DN25 and DN32 made of brass EN 12165
- Application of low friction sliding element for DN40-DN50
- Wedge nut made of forged brass - replaceable for DN40-DN50
- Stainless steel spindle with rolled thread
- Low friction double spindle bearing acting both horizontal and vertical way
- O-ring spindle sealing packing cork protected against contact with medium
- Under pressure replaceable packing cork for DN40-DN50
- Forged packing cork protected against unscrewing
- Packing cork protected against dirt penetration
- Rubber gasket sealing between tube and connector body
- Body bonnet Zinc coated screws protected by wax
- Epoxy coating minimum 250 microns according to EN 14901 GSK RAL certificate
- Article according to EN 1074-1, EN 1074-2
- Threaded connection according to EN 10226-1; pressure PN10 and PN16
- Face to face according to producer documentation JAFAR
- Product marking according to: EN 19; EN 1074

Application:

Water and sewage networks and tanks. Transport of non agressive liquids.
Working conditions:
temp. up +70˚C
pressure up to 1,6 MPa

Execution variant:

Ductile cast iron EN-GJS 500-7
Connecting screws made of stainless steel

Test control:

Water pressure test according to EN 1074-1; EN 1074- 2; EN 12266-1
Seat 1,1 x PN
Body 1,5 x PN
Operation torque test

Instalation:

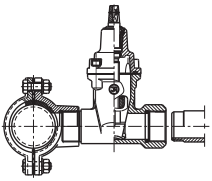

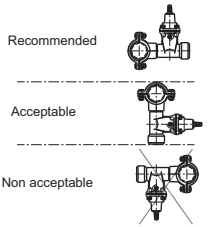

Accessories:

Extension spindle - see: 9010, 9011
Street box - see: 9501, 9503, 9504, 9509

3217

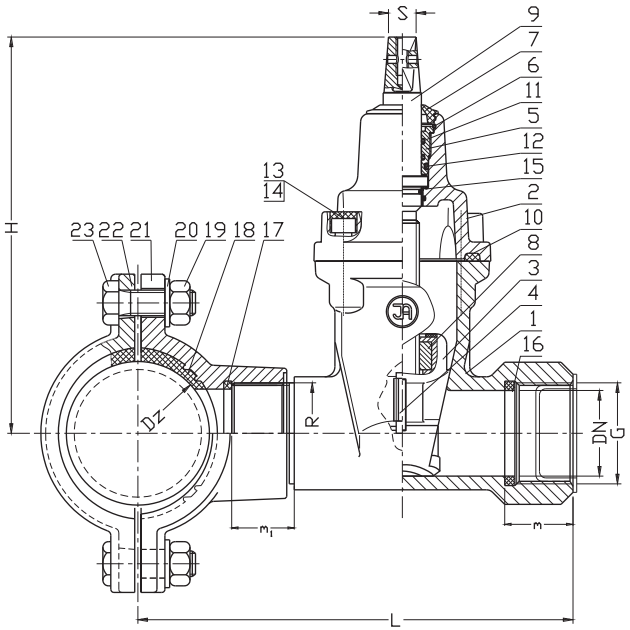

No.	Part	Standard execution
1	Body	Ductile cast iron EN-GJS-400-15 EN 1563
2	Bonnet	Ductile cast iron EN-GJS-400-15 EN 1563
3	Wedge	Brass CW617N (DN25-DN32) EN 12165 Ductile cast iron(DN40-DN50) EN-GJS-400-15, EN 1563 Rubber EPDM NBR EN ISO 1629
4	Wedge slider	Tarnoform 300 EN ISO 1874-1
5	Packing cork	Brass CW617N EN 12165
6	Protection ring	Steel 1.1260
7	Cleaning gasket	Rubber EPDM NBR EN ISO 1629
8	Spindle nut	Brass CW617N EN 12165
9	Spindle	Stainless steel 1.4021 EN 10088-1
10	Body-bonet gasket	Rubber EPDM NBR EN ISO 1629
11 12	O-ring	Rubber EPDM NBR EN ISO 1629
13	Screw	Steel Fe/Zn5 stainless steel EN ISO 4762
14	Screw stopper	Wax
15	Washer	Tarnoform 300 EN ISO 1874-1
16 18	Seal the tube	Rubber EPDM NBR EN ISO 1629
19	Nut	Stainless steel A4 EN ISO 4032
20	Washer	Stainless steel A2 EN ISO 7091
21	Footing	Ductile cast iron EN-GJS-400-15 EN 1563
22	Connectors	Ductile cast iron EN-GJS-400-15 EN 1563
23	Screw	Stainless steel A2 EN ISO 4014

- other material variants on special request

DN	G / R	Dz	L	m	m_1	H	S	Weight	Quantity screw
[mm]	[cal]	[mm]						[kg]	[pcs]
25 32	1" / 2" 5/4" / 2"	63	180	25	40	160	12	6,2	2
		90	194 / 197	25	40	160	12	7,1 / 5,3	2 / 4
		110	204 / 205	25	40	160	12	7,7 / 6,0	2 / 4
		125	212 / 222	25	40	160	12	8,5 / 8,0	2 / 4
		160	232 / 231	25	40	160	12	9,5 / 7,4	2 / 4
		180	251	25	40	160	12	7,9	4
		200	255	25	40	160	12	12,0	2
		225	264	25	40	160	12	13,1	2
		250	273	25	40	160	12	16,2	2
		280	288	25	40	160	12	16,9	2
		315	306	25	40	160	12	19,4	2
40	6/4" / 2"	63	215	40	40	215	14	9,3	2
		90	229 / 232	40	40	215	14	10,2 / 8,4	2 / 4
		110	239 / 240	40	40	215	14	10,8 / 9,1	2 / 4
		125	247 / 257	40	40	215	14	11,6 / 9,9	2 / 4
		160	267 / 266	40	40	215	14	12,6 / 10,5	2 / 4
		180	286	40	40	215	14	11,0	4
		200	290	40	40	215	14	15,1	2
		225	299	40	40	215	14	16,2	2
		250	308	40	40	215	14	19,3	2
		280	321	40	40	215	14	20,0	2
		315	341	40	40	215	14	22,5	2
50	2" / 2"	63	235	40	40	225	14	10,0	2
		90	249 / 252	40	40	225	14	11,0 / 9,2	2 / 4
		110	259 / 260	40	40	225	14	11,6 / 9,9	2 / 4
		125	267 / 277	40	40	225	14	12,4 / 10,7	2 / 4
		160	287 / 286	40	40	225	14	13,4 / 11,3	2 / 4
		180	306	40	40	225	14	11,8	4
		200	310	40	40	225	14	15,6	2
		225	319	40	40	225	14	17,0	2
		250	328	40	40	225	14	20,1	2
		280	341	40	40	225	14	20,8	2
		315	361	40	40	225	14	23,3	2

We reserve the rights to modify the production program and the given data without separate notices due to the permanent company development.

Connector set
for hard pipes

PN10
PN16

WATER

Connector set DN50

Packing cork protected against unscrewing and fully covered by additional cleaning gasket

Horizontal and vertical double spindle bearing

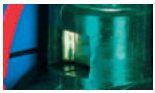

Replaceable wedge nut

Application of low friction sliding element

Product description (standard execution):

- Body bonnet and wedge made of ductile cast iron EN-GJS 400-15
- Full bore gate valve
- NBR/EPDM fully vulcanised wedge DN32 made of brass EN 12165
- Application of low friction sliding element for DN40-DN50
- Wedge nut made of forged brass - replaceable for DN40-DN50
- Stainless steel spindle with rolled thread
- Low friction double spindle bearing acting both horizontal and vertical way
- O-ring spindle sealing packing cork protected against contact with medium
- Under pressure replaceable packing cork(DN40 and DN50)
- Forged packing cork protected against unscrewing
- Packing cork protected against dirt penetration
- Rubber gasket sealing between tube and connector body
- Body bonnet Zinc coated screws protected by wax
- Easy clamp assembling with the connector jaw
- Gasket positioner against wrong assembling
- Acid resistant steel pipe strap
- Stainless steel clamp screws
- Epoxy coating minimum 250 microns according to EN 14901 GSK RAL certificate
- Article according to EN 1074-1, EN 1074-2
- Face to face according to producer documentation JAFAR
- Product marking according to: EN 19; EN 1074

Application:

Water and sewage networks and tanks. Transport of non agressive liquids.
Working conditions:
temp. up +70˚C
pressure up to 1,6 MPa

Execution variant:

Ductile cast iron EN-GJS 500-7
Connecting screws made of stainless steel

Test control:

Water pressure test according to EN 1074-1; EN 1074- 2; EN 12266-1
Seat 1,1 x PN
Body 1,5 x PN
Operation torque test

Instalation:

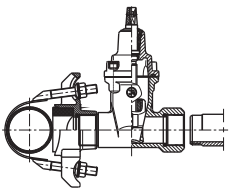

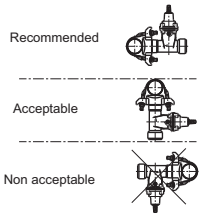

Accessories:

Extension spindle - see: 9010, 9011
Street box - see: 9501, 9503, 9504, 9509

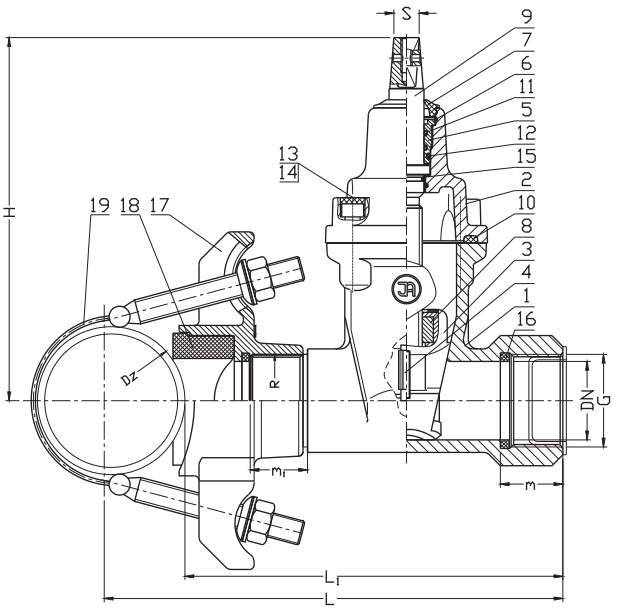

No.	Part	Standard execution
1	Body	Ductile cast iron EN-GJS-400-15 EN 1563
2	Bonnet	Ductile cast iron EN-GJS-400-15 EN 1563
3	Wedge	Brass CW617N DN32 EN 12165 Ductile cast iron DN40-DN50 EN-GJS-400-15 EN 1563 Rubber EPDM NBR EN SO 1629
4	Wedge slider	Tarnoform 300 EN ISO 1874-1
5	Packing cork	Brass CW617N EN 12165
6	Protection ring	Steel 1.1260
7	Cleaning gasket	Rubber EPDM NBR EN ISO 1629
8	Spindle nut	Brass CW617N EN 12165
9	Spindle	Steel 1.4021 EN 10088-1
10	Body -bonnet gasket	Rubber EPDM NBR EN ISO 1629
11 12	O-ring	Rubber EPDM NBR EN ISO 1629
13	Screw	Steel Fe/Zn5 stainless steel EN ISO 4762
14	Screw stoper	Wax
15	Washer	Tarnoform 300 EN ISO 1874-1
16 18	Seal the tube	Rubber EPDM NBR EN ISO 1629
17	Clamp saddle	Ductile cast iron EN-GJS-400-15 EN 1563
19	Pipe strap TYP 3330	Stainless steel EN 10088-1 Rubber EPDM NBR EN ISO1629

DN	G / R	Dz	L	L_1	m	m_1	H	S	Weight
[mm]	[cal]	[mm]							[kg]
32	5/4" / 5/4"	88-738	L_1+Dz/2	165	25	40	160	12	6,8
32	5/4" / 2"	88-738	L_1+Dz/2	175	25	40	160	12	6,9
40	6/4" / 6/4"	88-738	L1+Dz/2	225	40	40	215	14	10,5
40	6/4" / 2"	88-738	L1+Dz/2	225	40	40	215	14	10,6
50	2" / 2"	88-738	L_1+Dz/2	245	40	40	225	14	11,7

We reserve the rights to modify the production program and the given data without separate notices due to the permanent company development.

Tapping saddle
for PE and PVC pipes

PN10
PN16

WATER

Tapping saddle DN50

Product description (standard execution):

- Body bonnet and wedge made of ductile cast iron EN-GJS 400-15
- Head protected against unscrewing
- Drill diameter 38 mm
- Elongated drilling knife made of stainless steel
- O-ring spindle sealing, packing cork protected against contact with medium
- Connection diameter 5/4" or 2"
- External diameter of PVC, PE HD80, PE HD100 and PE HD100RC pipes: 63, 90, 110, 125, 140, 160, 200, 225,
- EPDM fully covered clamp
- Body-clamp stainless steel screws
- Clean gasket protecting packing cork against dirt penetration from outside
- Epoxy coating minimum 250 microns according to EN 14901 GSK RAL certificate
- Article according to EN 1074-1, EN 1074-2, EN 1171
- Face to face according to producer documentation JAFAR
- Product marking according to: EN 19, EN 1074

.

Application:

Water and sewage networks and tanks. Transport of non agressive liquids.
Working conditions:
temp. up +70˚C
pressure up to 1,6 MPa

Execution variant:

Ductile cast iron EN-GJS 500-7

Test control:

Water pressure test according to EN 1074-1; EN 1074- 2; EN 12266-1
Seat 1,1 x PN
Body 1,5 x PN
Operation torque test

Instalation:

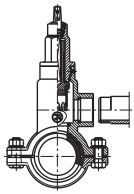

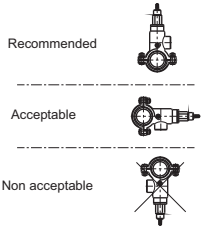

Accessories:

Extension spindle - see: 9010, 9011
Street box - see: 9501, 9503, 9504, 9509

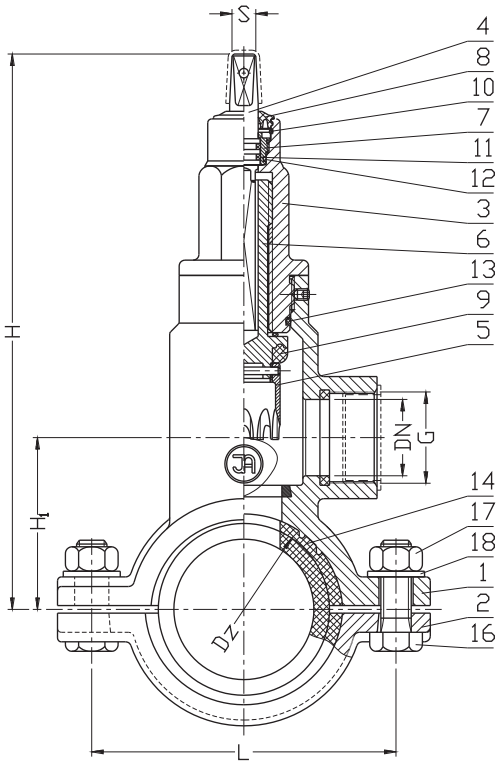

No.	Part	Standard execution
1	Body	Ductile cast iron EN-GJS-400-15 EN 1563
2	Clamp	Ductile cast iron EN-GJS-400-15 EN 1563
3	Cap	Ductile cast iron EN-GJS-400-15 EN 1563
4	Spindle	Stainless steel 1.4021 EN 10088-1
5	Knife	Stainless steel 1.4541 EN 10088-1
6	Coupler	Brass CW617N EN 12165
7	Packing cork	Brass CW617N EN 12165
8	Cleaning gasket	Rubber EPDM EN ISO 1629
9	Gasket	Rubber EPDM EN ISO 1629
10	Protection ring	Steel 1.1260
11-13	O-ring	Rubber EPDM EN ISO 1629
14 15	Seal the tube	Rubber EPDM EN ISO 1629
16	Screw	Stainless steel A2 EN ISO 4017
17	Nut	Stainless steel A4 EN ISO 4032
18	Washer	Stainless steel A2 EN ISO 7091

- other material variants on special request

DN	G	Dz	H_1	H	L	S	Weight
[mm]	[cal]	[mm]					[kg]
32	5/4"	63	77	280	132	12	6,4
32	5/4"	90	90	293	160	12	7,9
32	5/4"	110	100	303	180	12	8,2
32	5/4"	125	112	315	200	12	8,5
32	5/4"	140	116	320	205	12	8,7
32	5/4"	160	126	330	225	12	10,2
32	5/4"	200	145	348	274	12	12,5
32	5/4"	225	158	360	300	12	13,6
50	2"	63	77	280	132	12	6,8
50	2"	90	90	293	160	12	7,9
50	2"	110	100	303	180	12	8,3
50	2"	125	112	315	200	12	8,8
50	2"	140	116	320	205	12	9,3
50	2"	160	126	330	225	12	10,1
50	2"	200	145	348	274	12	12,5
50	2"	225	158	360	300	12	13,3

We reserve the rights to modify the production program and the given data without separate notices due to the permanent company development.

Pipe strap
for water lines

PN16

WATER

Pipe strap DN100

No.	Part	Standard execution
1	Bolt	Stainless steel A2 EN ISO 4762
2	Rubber mat	Rubber EPDM EN ISO1629
3	Bracket	Stainless steel EN 10088-1
4	Nut	Stainless steel A4 EN ISO 4032
5	Washer	Stainless steel A2 EN ISO 7091
6	Clamp	Stainless steel EN 10088-1

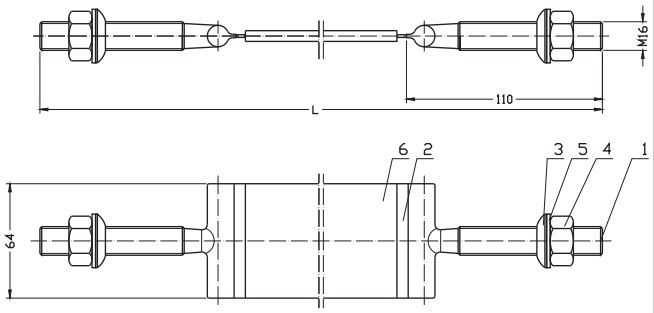

DN	Pipe range (*)	L	Weigt
	[mm]		[kg]
80	88 - 104	395	0,7
100	108 - 120	450	0,7
125	133 - 149	515	0,8
150	159 - 184	598	0,9
175	191 - 213	680	0,9
200	216 - 234	752	1,1
225	241 - 259	832	1,1
250	267 - 298	920	1,2
300	318 - 340	1044	1,4
300	340 - 370	1122	1,4
350	378 - 412	1247	1,5
400	406 - 429	1315	1,6
450	470 - 480	1420	1,7
500	508 - 532	1630	2,0
600	610 - 635	1945	2,3
700	710 - 738	2270	2,8
800	812,8	2540	3,2
800	848	2660	3,3
(*) -by customer requirements			

Product description (standard execution):

- Strap made of acid proof steel
- Shape of rubber gasket EPDM provide good contact even in places with small defects irregularities, pitting resulting of corrosion
- Tie screws made of stainless steal
- Face to face according to producer documentation
- Product marking according to: EN 19; EN 1074

Application:

Water and sewage networks and tanks. Transport of non agressive liquids.
Working conditions:
temp. up +70˚C
pressure up to 1,6 MPa

Installation:

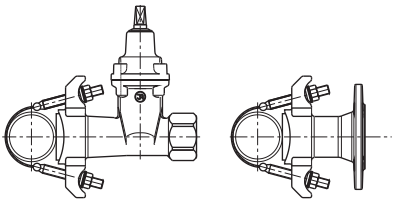

Resilient seated Gate valve with ISO
fiting for PE pipe both ends

PN16

WATER

Gate valve DN32 ISO40

Sealing with the clamping ring and O-ring

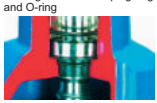

Horizontal and vertical double spindle bearing

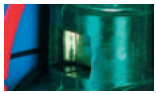

Replaceable wedge nut

Application of low friction sliding element

Product description (standard execution):

- Body bonnet and wedge made of ductile cast iron EN-GJS 400-15
- POM tube clamping ring protection against slipping
- Full bore gate valve
- Outside and inside full vulcanized wedge by NBR EPDM; DN25 and DN32 made of brass EN 12165
- Forged replaceable wedge nut made of brass for gate valve DN40 and DN50
- Application of low friction sliding element for gate valve DN40 and DN50
- Stainless steel spindle with rolled thread
- Low friction double spindle bearing both horizontal and vertical way
- O-ring spindle sealing packing cork protected against medium
- Under pressure replaceable packing cork
- Forged packing cork protected against unscrewing
- Packing cork protected against dirt penetration
- Body bonnet Zinc coated screws protected by wax
- Epoxy coating minimum 250 microns according to EN 14901 GSK RAL certificate
- Article according to EN 1074-1, EN 1074-2
- Face to face according to producer documentation JAFAR
- Product marking according to EN 19; EN 1074

Application:

Water networks and tanks. Transport of non agressive liquids.
Working conditions:
temp. up +70˚C
pressure up to 1,6 MPa

Execution variant:

Ductile cast iron EN-GJS 500-7
SS body bonnet screws

Test control:

Hydraulic test according to EN 1074-1, EN 1074- 2; EN 12266-1
Seat 1,1 x PN
Body 1,5 x PN
Operation torque test

Installation:

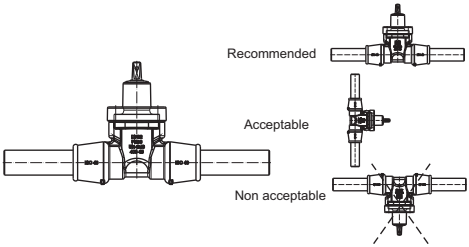

Accessories:

Extension spindle - see: 9010, 9011
Welt for ISO connections - see: 9306
Street box - see: 9501 9503 9504 9509

For diameters DN20 - DN32

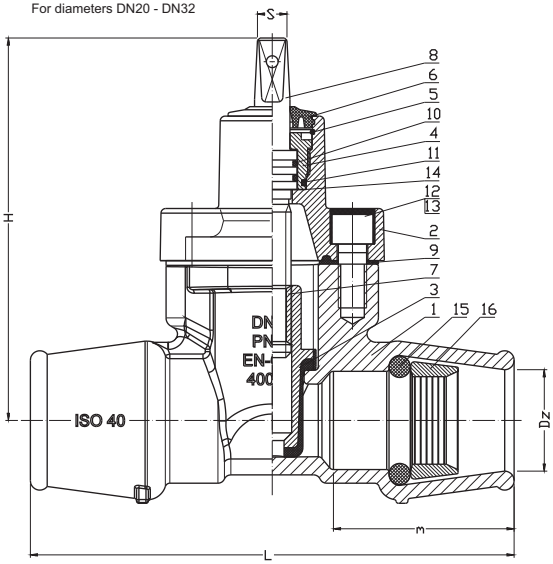

For diameters DN40 - DN50

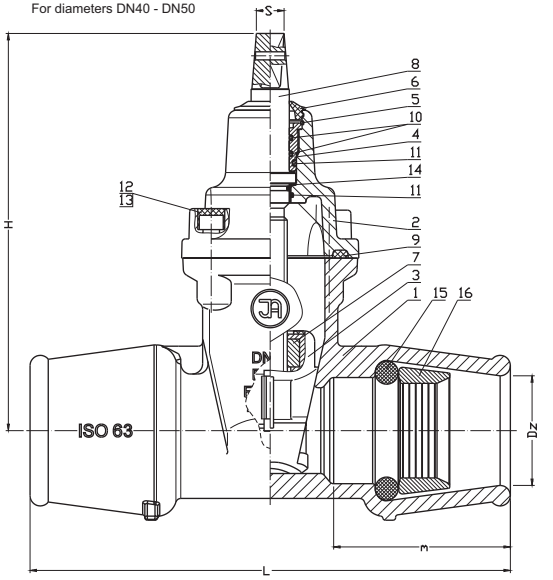

No.	Part	Standard execution
1	Body	Ductile cast iron EN-GJS 400-15 EN 1563
2	Bonnet	Ductile cast iron EN-GJS 400-15 EN 1563
3	Wedge	Brass CW617N (DN20-DN32) EN 1982 Ductile cast iron (DN40-DN50) EN-GJS 400-15; EN 1563 Rubber EPDM NBR PN ISO 1629
	Wedge slider	Tarnoform 300 (DN40-DN50) EN ISO 1874-1
4	Packing cork	Brass CW617N EN 12165
5	Protection ring	Steel 1.1260 EN-74/H-84032
6	Cleaning gasket	Rubber EPDM NBR EN ISO 1629
7	Spindle nut	Brass CW617N (DN40-DN50) EN 12165
8	Spindle	Stainless steel 1.4021 EN 10088-1
9	Body -bonnet gasket	Rubber EPDM NBR EN ISO 1629
10 11	O-ring	Rubber EPDM NBR EN ISO 1629
12	Screw	Steel Fe/Zn5, stainless steel EN ISO 4762
13	Screw stopper	Wax
14	Washer	Tarnoform 300 EN ISO 1874-1
15	Gasket	Rubber EPDM NBR ISO 1629
16	Tension ring	POM EN ISO 1874-1

- other material variants on special request

DN	Dz	PN	H	L	m	S	Weight
[mm]		[Bar]	[mm]				[kg]
20*	25	16	160	165	52	12	3
25	32	16	160	184	72	12	3.5
32	40	16	160	205	77	12	4,1
40	50	16	215	230	80	14	7
50	63	16	225	270	85	14	8,5

* during commissioning

We reserve the rights to modify the production program and the given data without separate notices due to the permanent company development.

Resilient seated Gate valve with ISO/2"
fiting for PE pipe

PN16

WATER

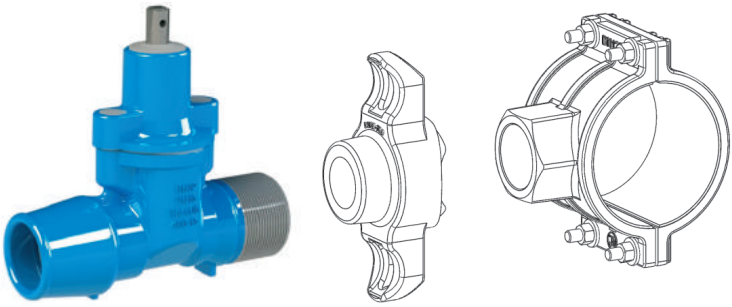

Gate valve DN32 ISO40/2"

Product description (standard execution):

- Body bonnet and wedge made of ductile cast iron EN-GJS 400-15
- POM tube clamping ring protection against slipping
- Full bore gate valve
- Outside and inside full vulcanized wedge by NBR EPDM; DN25 and DN32 made of brass EN 12165
- Forged replaceable wedge nut made of brass for gate valve DN40 and DN50
- Application of low friction sliding element for gate valve DN40 and DN50
- Stainless steel spindle with rolled thread
- Low friction double spindle bearing both horizontal and vertical way
- O-ring spindle sealing packing cork protected against medium
- Under pressure replaceable packing cork
- Forged packing cork protected against unscrewing
- Packing cork protected against dirt penetration
- Body bonnet Zinc coated screws protected by wax
- Epoxy coating minimum 250 microns according to EN 14901 GSK RAL certificate
- Article according to EN 1074-1, EN 1074-2
- Face to face according to producer documentation JAFAR
- Product marking according to EN 19; EN 1074

Application:

Water networks and tanks. Transport of non agressive liquids.
Working conditions:
temp. up +70˚C
pressure up to 1,6 MPa

Execution variant:

Ductile cast iron EN-GJS 500-7
SS body bonnet screws

Test control:

Hydraulic test according to EN 1074-1, EN 1074- 2; EN 12266-1
Seat 1,1 x PN
Body 1,5 x PN
Operation torque test

Installation:

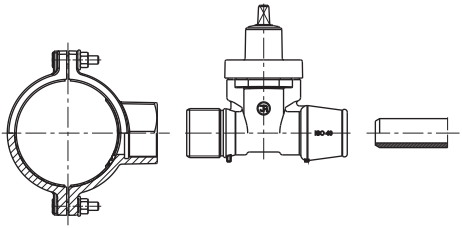

Accessories:

Extension spindle - see: 9010, 9011
Welt for ISO connections - see: 9306
Street box - see: 9501 9503 9504 9509

For diameters DN20 - DN32

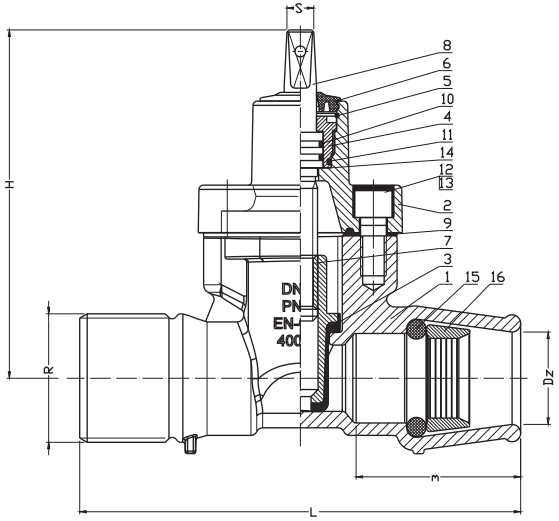

For diameters DN40 - DN50

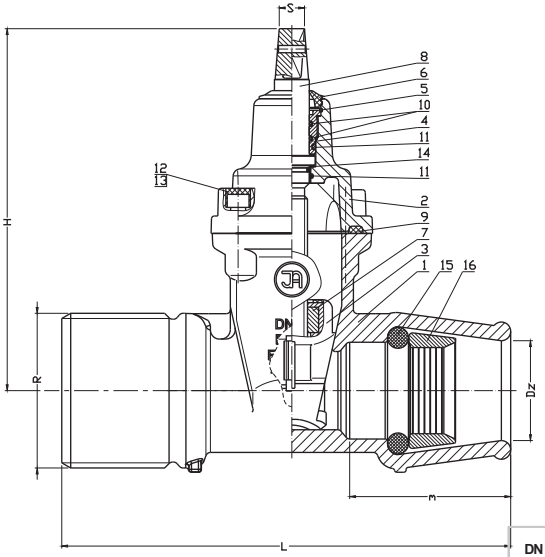

No.	Part	Standard execution
1	Body	Ductile cast iron EN-GJS 400-15 EN 1563
2	Bonnet	Ductile cast iron EN-GJS 400-15 EN 1563
3	Wedge	Brass CW617N (DN20-DN32) EN 1982 Ductile cast iron (DN40-DN50) EN-GJS 400-15; EN 1563 Rubber EPDM NBR PN ISO 1629
	Wedge slider	Tarnoform 300 (DN40-DN50) EN ISO 1874-1
4	Packing cork	Brass CW617N EN 12165
5	Protection ring	Steel 1.1260 EN-74/H-84032
6	Cleaning gasket	Rubber EPDM NBR EN ISO 1629
7	Spindle nut	Brass CW617N (DN40-DN50) EN 12165
8	Spindle	Stainless steel 1.4021 EN 10088-1
9	Body-bonnet gasket	Rubber EPDM NBR EN ISO 1629
10 11	O-ring	Rubber EPDM NBR EN ISO 1629
12	Screw	Steel Fe/Zn5, stainless steel EN ISO 4762
13	Screw stopper	Wax
14	Washer	Tarnoform 300 EN ISO 1874-1
15	Gasket	Rubber EPDM NBR ISO 1629
16	Tension ring	POM EN ISO 1874-1

- other material variants on special request

DN	Dz	R	PN	H	L	m	S	Weight
[mm]		[“]	[Bar]	[mm]				[kg]
20*	25	2	16	160	180	52	12	3
25	32	2	16	160	186	72	12	3.5
32	40	2	16	160	196	77	12	4,1
40*	50	2	16	215	230	80	14	7
50*	63	2	16	225	270	85	14	8,5

* during commissioning

We reserve the rights to modify the production program and the given data without separate notices due to the permanent company development.

Double eccentric butterfly valve with electric actuator flanged

PN10
PN16

WATER

Butterfly valve DN1600

Product description (standard execution):

- Body and cover made of ductile cast iron EN- GJS-400-15
- Eccentric disc made of ductile cast iron EN-GJS 500-7
- Body sealing ring made of stainless steel 1.4404 (AISI 316L)
- Pressure ring made of stainless steel 1.4301
- EPDM sealing placed on disc replaceable without disassembling the disc
- Centering slide bearing shaft
- Anticorrosion protection - Epoxy coating minimum 250 microns according to EN 14901 GSK RAL cerificate
- Medium flow regulation design
- Stainless steel connecting bolts
- Flanges connection according to EN 1092-2 (DIN 2501) pressure PN10; PN16
- Actuator connector according to EN ISO 5211
- Face to face according to EN 558 (F4), row 14 (DIN 3202)
- Product according to EN 1074-1; EN 1074-2; EN 593
- Product marking according to EN 19; EN 1074

Application:

Water network and tanks.Transport of industrial water and non agressive liquids.
Working conditions:
temp. up to +70˚C
pressure up to 1.6 MPa.

Execution variant:

With by-pass from DN500

Test control:

Hydraulic test according to EN 1074-1; EN 1074-2; EN 12266-1
Seat: 1,1 xPN
Body: 1,5 x PN
Operation torque test.

Installation:

Actuator from the side shaft in horizontal position.
Recommended assembly in accordance with direction of flow.

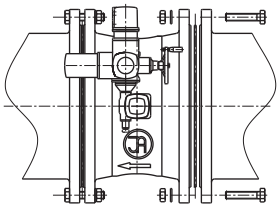

4493SA

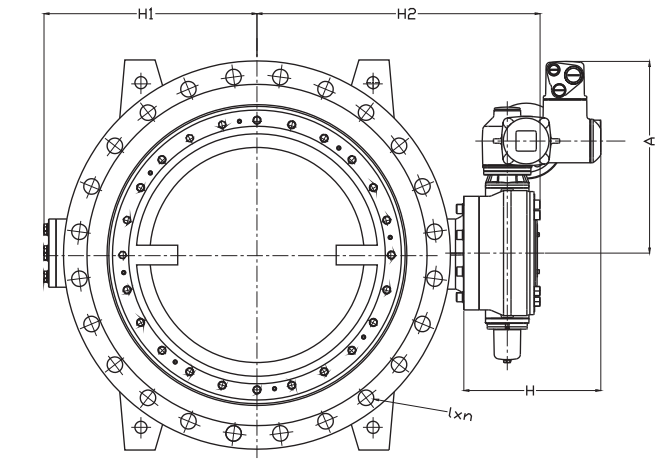

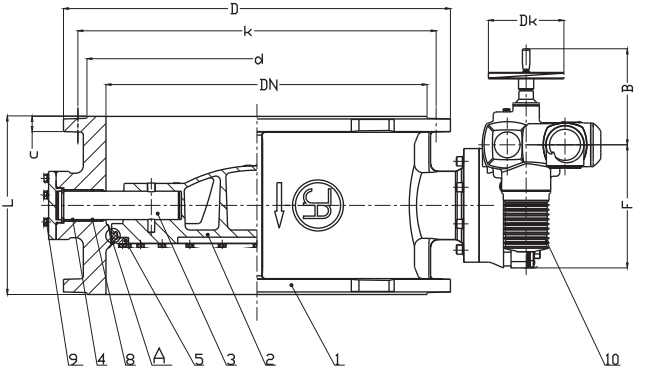

No.	Part	Standard execution
1	Body	Ductile cast iron EN-GJS-400-15 EN 1563
2	Disc	Ductile cast iron EN-GJS-500-7 EN 1563
3	Lower shaft	Stainless steel 1.4021 EN 10088-1
4	Sleeve	Brass CW612N, CW614N EN 12449
5	Pressure ring	Stainless steel 1.4301 EN 10088-1
6	Disc sealing ring	Rubber EPDM EN ISO 1629
7	Body sealing ring	Stainless steel 1.4430 EN 10088-1
8	O-ring	Rubber EPDM EN ISO 1629
9	Screw	Stainless steel EN ISO 4017
10	Electic actuator	Producer catalogue

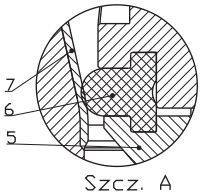

DN	L	D	K PN16 (PN10)	d PN16 (PN10)	c PN16	c PN10	l x n PN16 (PN10)	H1	H2	Dk	A	B	F	H	EN ISO 5211
[mm]															
400	310	580	525 (515)	480	28	24,5	31(28)x16	310	640	500	405	191	282	315	F14
450	330	640	585 (565)	548 (530)	30	25,5	31(28)x20	335	690	500	405	191	282	315	F14
500	350	715	650 (620)	609 (582)	31,5	26,5	34(28)x20	380	780	600	535	191	282	325	F16
600	390	840	770 (725)	720 (682)	36	30	37(31)x20	440	860	400	540	191	282	325	F16
700	430	910	840	794	39,5	32,5	37(31)x24	490	930	500	615	191	282	340	F25
800	470	1025	950	901	43	35	41(34)x24	570	1020	500	615	191	282	340	F25
900	510	1125	1050	1001	46,5	37,5	41(34)x28	625	1130	600	700	191	282	356	F25
1000	550	1255	1170 (1160)	1112	50	40	44(37)x28	700	1180	600	700	191	282	356	F25
1100	630	1355	1270	1218	53,5	42,5	44(37)x32	760	1300	600	740	235	384	450	-
1200	630	1485	1390 (1380)	1328	57	45	50(41)x32	820	1450	600	740	235	384	450	F30
1400	710	1685	1590	1530	60	46	50(44)x36	920	1530	600	882	235	384	465	F30
1600	790	1930	1820	1750	65	49	57(50)x40	1045	1615	600	975	235	384	465	F40
1800	870	2130	2020	1950	70	52	57(50)x44	1170	1810	600	975	235	384	465	F40
2000	950	2345	2230	2150	75	55	62(50)x48	1301	1908	600	975	235	384	465	F48

We reserve the rights to modify the production program and the given data without seperate notices due to the permanent company development.

Double eccentric butterfly valve
flanged

PN10
PN16

WATER

Butterfly valve DN400

Product description (standard execution):

- Body and cover made of ductile cast iron EN -GJS 400-15
- Eccentric disc made of ductile cast iron EN-GJS 500-7
- Body sealing ring made of stainless steel 1.4430 (AWS ER316LSi)
- Pressure ring made of stainless steel 1.4301
- EPDM sealing placed on disc replaceable without disassembling the disc
- Centering slide bearing shaft
- Anticorrosion protection - Epoxy coating minimum 250 microns according to EN 14901, GSK RAL certificate
- Medium flow regulation design
- Stainless steel connecting bolts
- Flanges connection according to EN 1092-2 (DIN 2501) pressure PN10; PN16
- Actuator connector according to EN ISO 5211
- Face to face according to EN 558, row 14 (DIN 3202)
- Product according to EN 1074-1; EN 1074-2; EN 593
- Product marking according to EN 19; EN 1074

Application:

Water network and tanks.Transport of industrial water and non agressive liquids.
Working conditions:
temp. up to +70˚C

Execution variant:

With by-pass from DN500
With electric or pneumatic actuator AUMA
With UV resistant paint coating
Under the housing

Test control:

Hydraulic test according to EN 1074-1; EN 1074-2; EN 12266-1
Seat: 1,1 xPN
Body: 1,5 x PN
Operation torque test.

Installation:

Up to DN250 in any position.
Over DN250 actuator from the side-shaft in horizontal position.
Recommended assembly in accordance with direction of flow.

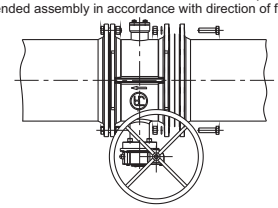

Accessories:

Extension spindle - see: 9025
Pillar with handwheel - see: 9113
Pillar for electric actuator - see: 9114
Street box - see: 9501

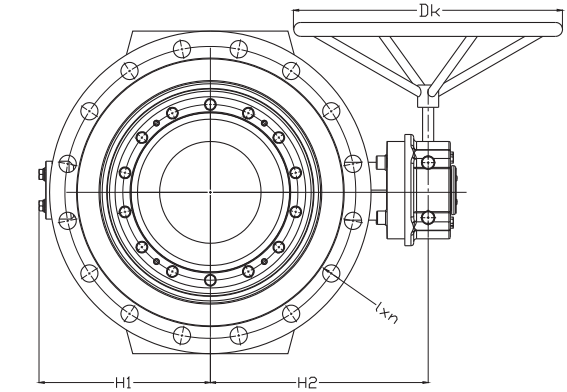

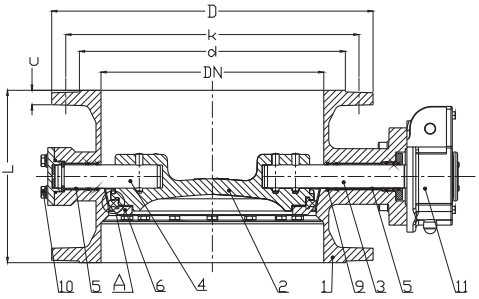

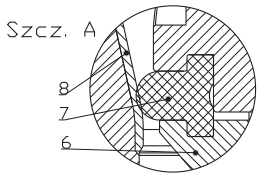

No.	Part	Standard execution
1	Body	Ductile cast iron EN- GJS-400-15 EN 1563
2	Disc	Ductile cast iron EN-GJS-500-7 EN 1563
3 4	Lower shaft Upper shaft	Stainless steel 1.4021 EN 10088-1
5	Sleeve	Brass CW612N, CW614N EN 12449
6	Pressure ring	Stainless steel 1.4301 EN 10088-1
7	Disc sealing ring	Rubber EPDM EN ISO 1629
8	Body sealing ring	Stainless steel 1.4430 EN 10088-1
9	O-ring	Rubber EPDM EN ISO 1629
10	Screw	Stainless steel EN ISO 4017
11	Gearbox	Producer catalogue Protection grade IP68

DN	L	D	K PN16 (PN10)	d PN16 (PN10)	c PN16 (PN10)	l x n PN16 (PN10)	H1	H2	Dk	EN ISO 5211	Weight
[mm]											[kg]
200*	230	340	295	266	20	23x12(8)	180	308	200	F10	52
250*	250	405	355 (350)	319	22	28(23)x12	210	351	200	F10	68,5
300*	270	460	410 (400)	370	24,5	28(23)x12	250	332	500	F10	86,4
350*	290	520	470 (460)	429	26,5 (24,5)	28(23)x16	280	440	500	F14	150,4
400*	310	580	525 (515)	480	28 (24,5)	31(28)x16	310	402	500	F14	187
450*	330	640	585 (565)	548 (530)	30 (25,5)	31(28)x20	335	508	500	F14	236
500*	350	715	650 (620)	609 (582)	31,5 (26,5)	34(28)x20	380	458	600	F16	254
600*	390	840	770 (725)	720 (682)	36 (30)	37(31)x20	440	519	400	F16	343
700*	430	910	840	794	39,5 (32,5)	37(31)x24	490	736	500	F25	537
800*	470	1025	950	901	43 (35)	41(34)x24	570	647	500	F25	691
900	510	1125	1050	1001	46,5 (37,5)	41(34)x28	625	935	600	F25	775
1000*	550	1255	1170 (1160)	1112	50 (40)	44(37)x28	730	787	600	F25	1017
1100	630	1355	1270	1218	53,5 (42,5)	44(37)x32	760	1080	600	-	1240
1200*	630	1485	1390 (1380)	1328	57 (45)	50(41)x32	820	1154	600	F30	1470
1400	710	1685	1590	1530	60 (46)	50(44)x36	920	1235	600	F35	4440
1600	790	1930	1820	1750	65 (49)	57(50)x40	1045	1415	600	F40	5346
1800	870	2130	2020	1950	70 (52)	57(50)x44	1170	1684	600	F40	6438
2000	950	2345	2230	2150	75 (55)	62(50)x48	1301	1725	600	F48	11482

*compatible with DVGW certificate.

We reserve the rights to modify the production program and the given data without seperate notices due to the permanent company development.

Double eccentric butterfly valve with bypass
flanged

PN10
PN16

WATER

Butterfly valve DN800

Product description (standard execution):

- Body and cover made of ductile cast iron EN -GJS 400-15
- Eccentric disc made of ductile cast iron EN-GJS 500-7
- Body sealing ring and pressure ring made of stainless steel 1.4430 (AWS ER316LSi)
- EPDM sealing placed on disc replaceable without disassembling the disc
- Centering slide bearing shaft
- Anticorrosion protection - Epoxy coating minimum 250 microns according to EN 14901
- Medium flow regulation design
- Stainless steel connecting bolts
- Flanges connection according to EN 1092-2 (DIN 2501) pressure PN10; PN16
- Actuator connector according to EN ISO 5211
- Face to face according to EN 558, row 14 (DIN 3202)
- Product according to EN 1074-1; EN 1074-2; EN 593
- Product marking according to EN 19; EN 1074

Application:

Water network and tanks.Transport of industrial water and non agressive liquids.
Working conditions:
temp. up to +70˚C

Test control:

Hydraulic test according to EN 1074-1; EN 1074-2; EN 12266-1
Seat: 1,1 xPN
Body: 1,5 x PN
Operation torque test.

Accessories:

Extension spindle - see: 9025
Pillar with handwheel - see: 9113
Pillar for electric actuator - see: 9114
Street box - see: 9501

Execution variant:

With electric actuator AUMA
With UV resistant paint coating

Installation:

Recommended assembly in accordance with direction of flow.

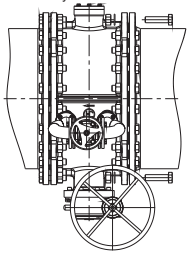

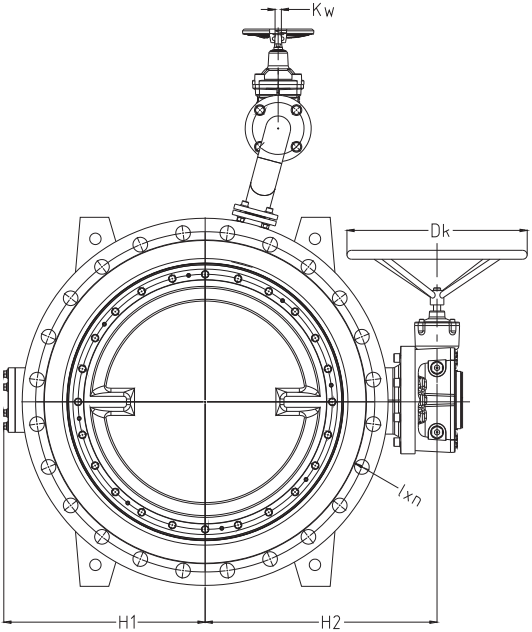

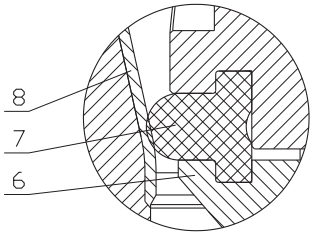

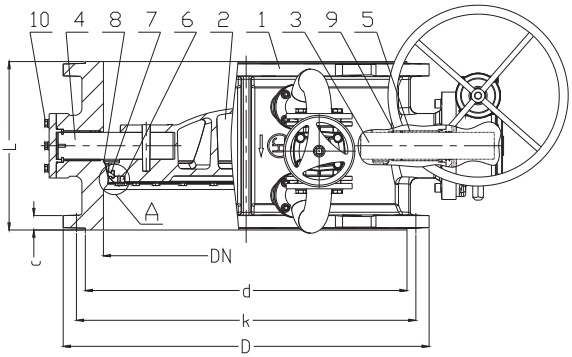

No.	Part	Standard execution
1	Body	Ductile cast iron EN- GJS-400-15 EN 1563
2	Cover	Ductile cast iron EN-GJS-500-7 EN 1563
3	Lower shaft	Stainless steel 1.4021 EN 10088-1
4	Upper shaft	Stainless steel 1.4021 EN 10088-1
5	Sleeve	Brass CW612N, CW614N EN 12449
6	Gland sleeve	Stainless steel 1.4301 EN 10088-1
7	Disc sealing ring	Rubber EPDM EN ISO 1629
8	Body sealing ring	Stainless steel 1.4430 EN 10088-1
9	O-ring	Rubber EPDM EN ISO 1629
10	Screw	Stainless steel EN ISO 4017

DN	L	D	K PN16 (PN10)	d PN16 (PN10)	c PN16	c PN10	I x n PN16 (PN10)	H1	H2	Dk	BY-PASS	KW	Weight
[mm]													[kg]
500	350	715	650 (620)	609 (582)	31,5	26,5	34(28)x20	380	458	600	DN40	14	263
600	390	840	770 (725)	720 (682)	36	30	37(31)x20	440	519	400	DN50	14	353
700	430	910	840	794	39,5	32,5	37(31)x24	490	736	500	DN65	17	551
800	470	1025	950	901	43	35	41(34)x24	570	647	500	DN65	17	705
900	510	1125	1050	1001	46,5	37,5	41(34)x28	625	935	600	DN80	17	790
1000	550	1255	1170 (1160)	1112	50	40	44(37)x28	730	787	600	DN80	17	1032
1100	630	1355	1270	1218	53,5	42,5	44(37)x32	760	1080	600	DN100	19	1261
1200	630	1485	1390 (1380)	1328	57	45	50(41)x32	820	1154	600	DN100	19	1491

We reserve the rights to modify the production program and the given data without seperate notices due to the permanent company development.

Concentric butterfly valve
LUG

PN10
PN16

WATER

Butterfly valve DN100

Product description (standard execution):

- Concentric disc made of stainless steel 1.4301 or ductile cast iron
- NBR replaceable loose liner protected against axial displacement
- Stainless steel 1.4021 solid spline (not pinned) shaft with the bottom side seated in blind hole of the body
- Three-slide bearings
- Special shaped loose liner to seal with the shaft crossing
- Additional shaft sealing made of NBR o-rings
- Body made of cast iron EN-GJS 400-15
- With lock lever up to DN200 over with gear box
- For DN350 splined connection from DN400 with pin connections
- Actuator connector according to ISO 5211 (ISO top flange)
- Epoxy coating to EN 14901
- End connection according to EN 1092-2 (DIN 2501), pressure PN10; PN16
- Face to face according to EN 558-A1 row 20 (DIN 3202)
- Product according to EN 1074-1; EN 1074-2; EN-593
- Product marking according to : EN 19; EN 1074

Application:

Water network and tanks.Transport of industrial water and non agressive liquids.
Working conditions:
temp. up to +70˚C
pressure up to 1.6 MPa.

Execution variant:

With lever for DN200
With Gear box from DN250
With electric or pneumatic actuator
For extension spindle

Test control:

Hydraulic test according to EN 1074-1; EN 1074-2; EN 12266-1
Seat: 1,1 xPN
Body: 1,5 x PN
Operation torque test.

Installation:

Up to DN250 in any position. Over DN250 actuator from the side shaft in horizontal position.

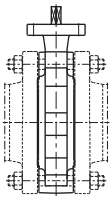

Accessories:

Extension spindle - see: 9010, 9011
Pillar with handwheel - see: 9113
Pillar for electric actuator - see: 9114
Street box - see: 9501

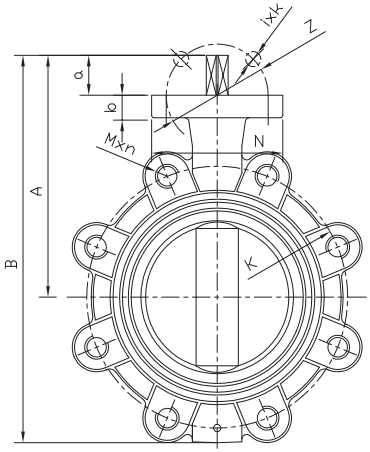

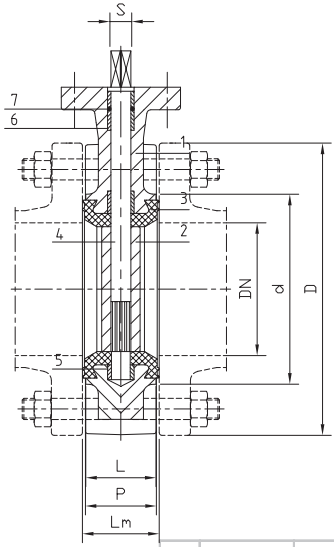

No.	Part	Standard execution
1	Body	Ductile cast iron EN-GJS-400-15 EN 1563
2	Disc	Ductile cast iron EN-GJS-400-15 EN 1563 Stal 1.4301 EN 10088-1
3	Ring	Rubber NBR EN ISO 1629
4	Shaft	Stainlees steel 1.4021 EN 10088-1
5, 6	Sleeve	Brass CW617N EN 12165 PTFE
7	O-ring	Rubber NBR EN ISO 1629

DN	PN	L	Lm	P	A	B	d	D		K		M		n		i	k	N	z	S	a	Weight
								PN10	PN16	PN10	PN16	PN10	PN16	PN10	PN16							
[mm]	[bar]	[mm]												[szt]			[mm]					[kg]
40	10 / 16	33	36	30	121	183	76	150		110		M16		4		4	7	70	50	11	28	3,2
50	10 / 16	43	46	40	137	203	92	165		125		M16		4		4	7	70	50	11	28	4,4
65	10 / 16	46	49	43	150	228	106	185		145		M16		4		4	7	70	50	11	28	5,8
80	10 / 16	46	49	42	160	245	114	200		160		M16		8		4	9	90	70	11	30	7,1
100	10 / 16	52	55	47	182	280	143	220		180		M16		8		4	9	90	70	14	30	8,1
125	10 / 16	56	59	54	207	328	170	250		210		M16		8		4	9	90	70	14	30	20,5
150	10 / 16	56	59	54	223	357	203	285		240		M20		8		4	9	90	70	17	30	23
200	10 / 16	60	63	57	255	418	252	340		295		M20		8	12	4	9	90	70	17	30	27
250	10 / 16	68	72	65	314	510	306	395	405	350	355	M20	M24	12	12	4	12	125	102	22	40	41
300	10 / 16	78	82	75	342	564	364	445	460	400	410	M20	M24	12	12	4	12	125	102	22	45	56
350	10 / 16	78	82	74	365	640	431	505	520	460	470	M20	M24	16	16	4	14	125	102	22	45	82
400	10 / 16	102	106	96	410	725	480	565	580	515	525	M24	M27	16	16	4	14	175	140	27	60	134
500	10 / 16	127	131	120	490	866	590	670	715	620	650	M24	M30	20	20	4	22	175	140	36	65	191
600	10 / 16	154	158	144	565	1031	688	780	840	725	770	M27	M33	20	20	4	22	210	165	36	65	266

We reserve the rights to modify the production program and the given data without seperate notices due to the permanent company development.

Concentric butterfly valve with electric actuator
flanged

PN10
PN16

WATER

Butterfly valve DN600

Butterfly valve DN350

Product description (standard execution):

- Concentric disc made of stainless steel 1.4301 or ductile cast iron
- EPDM/NBR replaceable loose liner protected against axial displacement
- Stainless steel 1.4021 solid spline (not pinned) shaft with the bottom side seated in blind hole of the body
- Three-slide bearings
- Special shaped loose liner to seal with the shaft crossing
- Additional shaft sealing made of EPDM/NBR o-rings
- Connection of the disc with the shaft roller
- Body made of ductile cast iron EN-GJS 400-15
- Actuator connector according to ISO 5211 (ISO top flange)
- Epoxy coating to EN 14901
- End connection according to EN 1092-2 (DIN 2501) pressure PN10; PN16
- Face to face according to EN 558-A1 row20 (DIN 3202)
- Product according to EN 1074-1; EN 1074-2; EN-593
- Product marking according to : EN 19, EN 1074

Application:

Water network and tanks.Transport of industrial water and non agressive liquids.
Working conditions:
temp. up to +70˚C
pressure up to 1.6 MPa.

Test control:

Hydraulic test according to EN 1074-1; EN 1074-2; EN 12266-1
Seat: 1,1 xPN
Body: 1,5 x PN
Operation torque test.

Installation:

Actuator from the side, shaft in horizontal position.

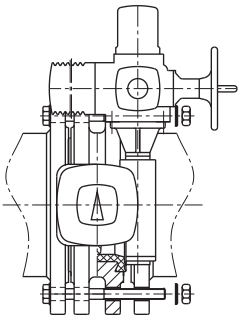

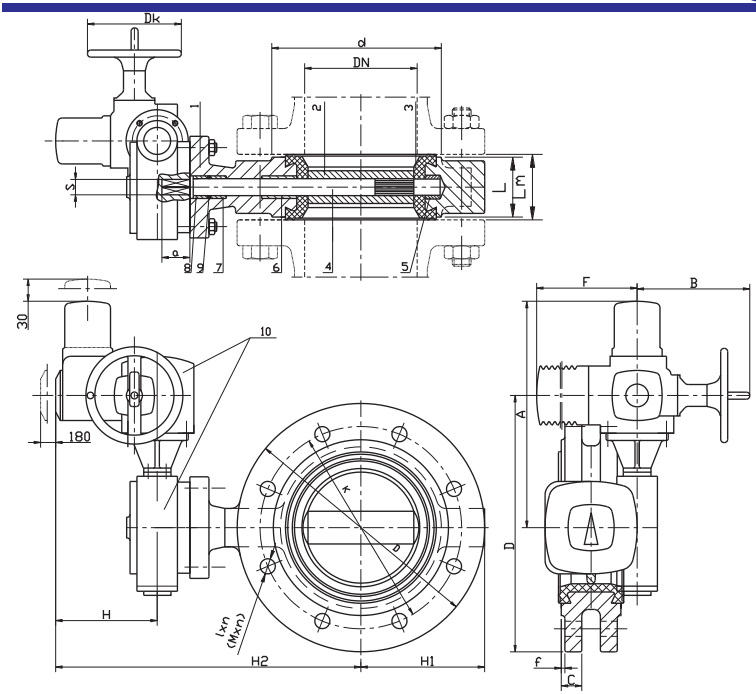

No.	Part	Standard execution
1	Body	Ductile cast iron EN-GJS-400-15 EN 1563
2	Disc	Ductile cast iron EN-GJS-400-15 EN 1563 Stainlees steel 1.4301 EN 10088-1
3	Ring	Rubber EPDM EN ISO 1629
4	Shaft	Stainlees steel 1.4021, 1.4057 EN 10088-1
5, 6 7, 8	Sleeve	Brass CW617N EN 12165 PTFE
9	O-ring	Rubber EPDM EN ISO 1629
10	Electric actuator	Producer calatogue

DN	PN	L	Lm	A	B	d	D		K		I		n		ISO 5211	F	H	H1	H2	S	a
							PN10	PN16	PN10	PN16	PN10	PN16	PN10	PN16							
[mm]	[bar]	[mm]											[szt]		-	[mm]					
400	10 / 16	102	106	405	254	480	565	580	515	525	28	31	16		F14	282	354	298	754	27	60
500	10 / 16	127	131	535	254	590	670	715	620	650	28	34	20			282	390	355	870	36	65
600	10 / 16	154	158	535	254	688	780	840	725	770	31	37	20		F16	282	390	464	952	36	66
700	10 / 16	165	169	539	254	800	895	910	840		31	37	24		F25	282	392	505	1016	46	66
800	10 / 16	190	195	615	254	900	1015	1025	950		34	41	24		F25	282	417	576	1089	46	66
900	10 / 16	203	208	700	254	1000	1115	1125	1050		34	41	28		F25	282	458	638	1178	55	118
1000	10 / 16	216	223	700	254	1120	1230	1255	1160	1170	37	44	28		F25	282	458	700	1258	55	142
1200	10 / 16	254	263	795	329	1300	1455	1485	1380	1390	41	50	32		F30	384	545	844	1485	-	150

We reserve the rights to modify the production program and the given data without seperate notices due to the permanent company development.

Concentric butterfly valve
flanged

PN10
PN16

WATER

Butterfly valve DN250

Butterfly valve DN150

Product description (standard execution):

- Concentric disc made of stainless steel 1.4301 or ductile cast iron
- EPDM replaceable loose liner protected against axial displacement
- Stainless steel 1.4021 solid spline (not pinned) shaft with the bottom side seated in blind hole of the body
- Three-slide bearings
- Special shaped loose liner to seal with the shaft crossing
- Additional shaft sealing made of EPDM o-rings
- Body made of cast iron EN-GJS 400-15
- With lock lever up to DN200 over with gear box
- Connection of the disc with the shaft roller
- Actuator connector according to ISO 5211 (ISO top flange)
- Epoxy coating to EN 14901
- End connection according to EN 1092-2 (DIN 2501), pressure PN10; PN16
- Face to face according to EN 558-A1 row 20 (DIN 3202)
- Product according to EN 1074-1; EN 1074-2; EN-593
- Product marking according to : EN 19; EN 1074

Application:

Water network and tanks.Transport of industrial water and non agressive liquids.
Working conditions:
temp. up to +70˚C
pressure up to 1.6 MPa.

Execution variant:

With lever for DN200
With Gear box from DN250
With electric or pneumatic actuator
For extension spindle

Test control:

Hydraulic test according to EN 1074-1; EN 1074-2; EN 12266-1
Seat: 1,1 xPN
Body: 1,5 x PN
Operation torque test.

Installation:

Up to DN250 in any position. Over DN250 actuator from the side shaft in horizontal position.

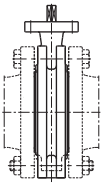

Accessories:

Extension spindle - see: 9010, 9011
Pillar with handwheel - see: 9113
Pillar for electric actuator - see: 9114
Street box - see: 9501

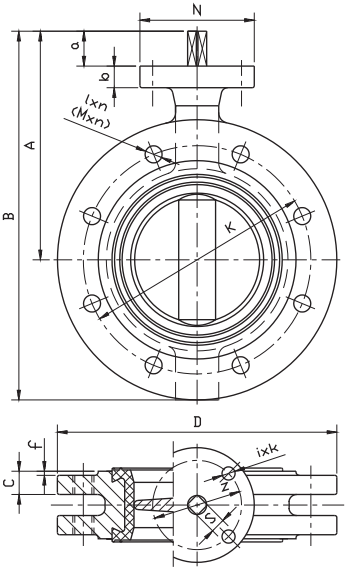

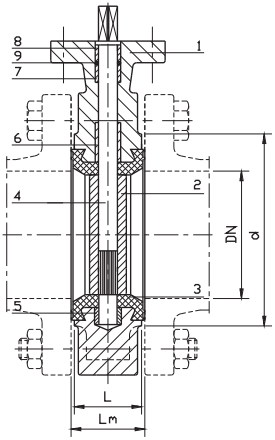

No.	Part	Standard execution
1	Body	Ductile cast iron EN-GJS-400-15 EN 1563
2	Disc	Ductile cast iron EN-GJS-400-15 EN1563 Stainlees steel 1.4301 EN10088-1
3	Ring	Rubber EPDM, EN ISO 1629
4	Shaft	Stainlees steel 1.4021, 1.4057 EN 10088-1
5, 6 7, 8	Sleeve	Brass CW617N EN 12165 PTFE
9	O-ring	Rubber EPDM EN ISO 1629

DN	PN	L	Lm	C	f	A	B	d	D		K		l (M)		n		i	k	N	z	S	a	Weight
									PN10	PN16	PN10	PN16	PN10	PN16	PN10	PN16							
[mm]	[bar]	[mm]													[szt]			[mm]					[kg]
150	10 (16*)	56	59	18	2	223	368	203	285		240		23 (M20)		8		4	9	90	70	17	30	16,5
200	10 (16*)	60	63	19	2	255	430	252	340		295		23 (M20)		8	12	4	9	90	70	17	30	25,0
250	10 (16*)	68	72	20	2	314	521	306	395	405	350	355	23 (M20)	28 (M24)	12	12	4	12	125	102	22	40	40,0
300	10 (16*)	78	82	22	3	342	577	364	445	460	400	410	23 (M20)	28 (M24)	12	12	4	12	125	102	22	45	57,0
350	10 (16*)	78	82	24	3	365	635	431	505	520	460	470	23 (M20)	28 (M24)	16	16	4	12	125	102	22	45	73,0
400	10 (16*)	102	106	26	4	410	720	480	565	580	515	525	28 (M24)	31 (M27)	16	16	4	14	175	140	27	60	110,0
500	10 (16*)	127	131	30	4	490	860	590	670	715	620	650	28 (M24)	34 (M30)	20	20	4	14	175	140	36	65	199,0
600	10 (16*)	154	158	34	5	565	1015	688	780	840	725	770	31 (M27)	37 (M33)	20	20	4	22	210	165	36	65	295,0
700	10 (16*)	165	169	34	5	610	1110	800	910	910	840	840	31 (M27)	37 (M33)	24	24	8	22	300	254	46	70	341,0
800	10 (16*)	190	196	44	5	620	1245	905	1015	1025	950	950	34(M30)	41(M36)	24	24	8	22	300	254	55	80	-
900	10 (16*)	203	209	46	5	720	1357	1005	1115	1125	1050	1050	34(M30)	41(M36)	28	28	8	22	300	254	55	118	-
1000	10 (16*)	216	223	50	5	800	1501	1010	1230	1255	1160	1170	37(M33)	44(M39)	28	28	8	22	300	254	55	142	-
1200	10 (16*)	254	263	56	5	940	1784	1330	1455	1455	1380	1390	41(M36)	50(M45)	32	32	8	22	350	298	65	160	-

* - nominal pressure PN16 on request, it is possible to make threaded holes

We reserve the rights to modify the production program and the given data without seperate notices due to the permanent company development.

Concentric butterfly valve with pneumatic actuator
wafer type

PN10
PN16

WATER

Centric butterfly valve DN100

Product description (standard execution):

- Concentric disc made of stainless steel 1.4401 or ductile cast iron
- EPDM/NBR replaceable loose liner protected against axial displacement
- Stainless steel 1.4021 solid spline (not pinned) shaft with the bottom side seated in blind hole of the body
- Three-slide bearings
- Special shaped loose liner to seal with the shaft crossing
- Additional shaft sealing made of EPDM/NBR o-rings
- For DN350 splined connection from DN400 with pin connections
- Body made of ductile cast iron EN-GJS 400-15
- Actuator connector according to ISO 5211 (ISO top flange)
- Epoxy coating to EN 14901
- End connection according to EN 1092-2 (DIN 2501) pressure PN10; PN16
- Face to face according to EN 558-A1 row20 (DIN 3202)
- Product according to EN 1074-1; EN 1074-2; EN-593
- Product marking according to : EN 19, EN 1074

Application:

Water network and tanks.Transport of industrial water and non agressive liquids.
Working conditions:
temp. up to +70˚C
pressure up to 1.6 MPa.

Installation:

DN50-DN250 in any position. Over DN250 shaft in horizontal position

Test control:

Hydraulic test according to EN 1074-1; EN 1074-2; EN 12266-1
Seat: 1,1 xPN
Body: 1,5 x PN
Operation torque test.

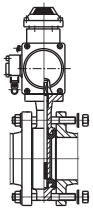

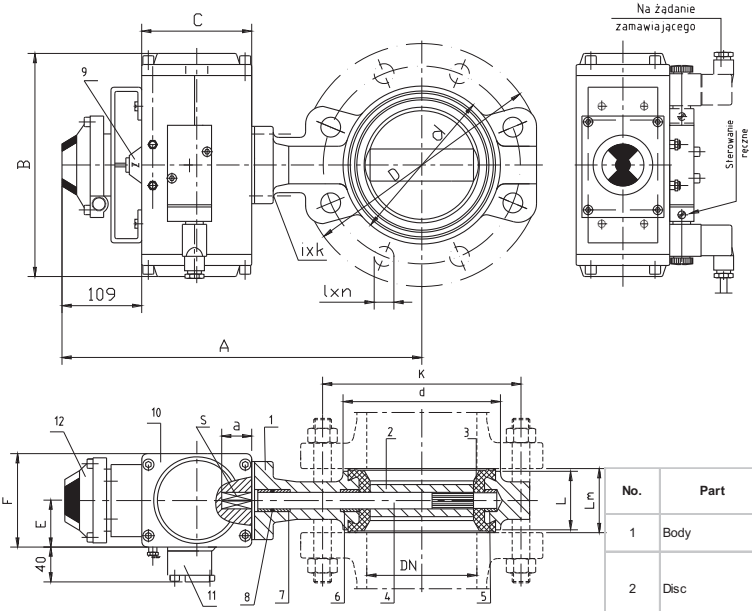

No.	Part	Standard execution
1	Body	Ductile cast iron EN-GJS-400-15 PN-EN 1563
2	Disc	Ductile cast iron EN-GJS-400-15 PN-EN 1563 Stainlees steel 1.4401 EN 10088-1
3	Ring	Rubber NBR or EPDM EN ISO 1629
4	Shaft	Stainlees steel 1.4021 EN 10088-1
5, 6, 7	Sleeve	Brass CW617N EN 12165, PTFE
8	O-ring	Rubber NBR; EPDM EN ISO 1629
9	Indicator	Producer calatogue
10	Pneumatic actuator	Producer calatogue
11	Solenoid valve	Producer calatogue
12	Breaker box	Producer calatogue

DN	PN	L	Lm	A	B	d	D		K		l		C	ISO 5211	i x k	z	S	a	E	F
							PN10	PN16	PN10	PN16	PN10	PN16								
[mm]	[bar]	[mm]											[mm]	-	[mm]				[mm]	
50	10 / 16	43	46	280	147	92	165		125		19		74	F05	4x7	50	11	28	42	72
65	10 / 16	46	49	318	168	106	185		145		19		88	F05	4x7	50	11	28	47	83
80	10 / 16	46	49	349	184	114	200		160		19		100	F05	4x7	50	11	30	53	95
100	10 / 16	52	55	370	204	143	220		180		19		109	F07	4x9	70	14	30	57	103
125	10 / 16	56	59	430	262	170	250		210		19		120	F07	4x9	70	14	30	59	109
150	10 / 16	56	59	440	268	203	285		240		23		135	F07	4x9	70	17	30	64	122
200	10 / 16	60	63	490	301	252	340		295		23		155	F10	4x12	102	17	30	75	142
250	10 / 16	68	72	542	390	306	395	405	350	355	23	28	172	F10	4x12	102	22	40	77	152
300	10 / 16	78	82	595	390	364	445	460	400	410	23	28	172	F10	4x12	102	22	45	77	152
350	10 / 16	78	82	620	458	431	505	520	460	470	23	28	197	F10	4x12	102	22	45	87	174
400	10 / 16	102	106	735	532	480	565	580	515	525	28	31	255	F14	4x18	140	27	60	113	226
500	10 / 16	127	131	830	602	590	670	715	620	650	28	34	292	F14	4x18	140	36	65	130	260

We reserve the rights to modify the production program and the given data without seperate notices due to the permanent company development.

Concentric butterfly valve with electric actuator
wafer

PN10
PN16

WATER

Centric butterfly valve DN200

Product description (standard execution):

- Concentric disc made of stainless steel 1.4401 or ductile cast iron
- EPDM/NBR replaceable loose liner protected against axial displacement
- Stainless steel 1.4021 solid spline (not pinned) shaft with the bottom side seated in blind hole of the body
- Three-slide bearings
- Special shaped loose liner to seal with the shaft crossing
- Additional shaft sealing made of EPDM/NBR o-rings
- For DN350 splined connection from DN400 with pin connections
- Body made of ductile cast iron EN-GJS 400-15
- Actuator connector according to ISO 5211 (ISO top flange)
- Epoxy coating to EN 14901
- End connection according to EN 1092-2 (DIN 2501) pressure PN10; PN16
- Face to face according to EN 558-A1 row20 (DIN 3202)
- Product according to EN 1074-1; EN 1074-2; EN-593
- Product marking according to : EN 19, EN 1074

Application:

Water network and tanks.Transport of industrial water and non agressive liquids.
Working conditions:
temp. up to +70˚C
pressure up to 1.6 MPa.

Test control:

Hydraulic test according to EN 1074-1; EN 1074-2; EN 12266-1
Seat: 1,1 xPN
Body: 1,5 x PN

Installation:

Actuator from the side. Shaft in horizontal position.

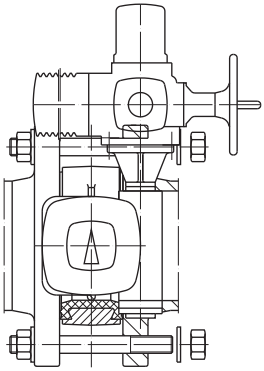

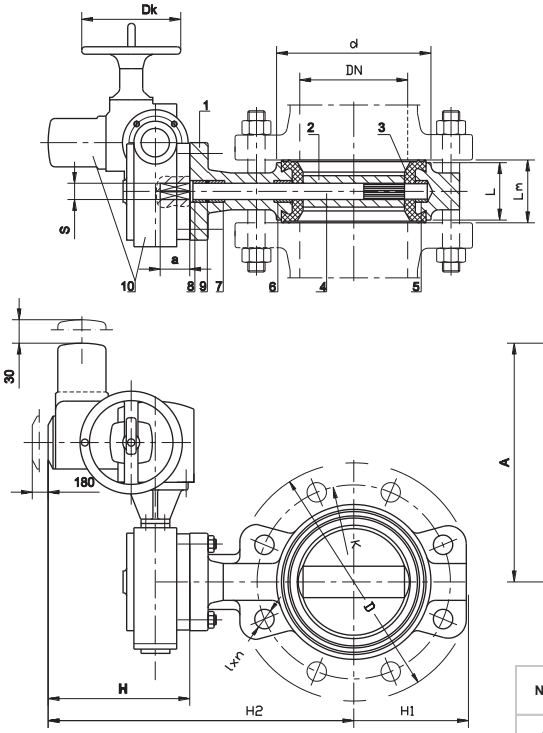

No.	Part	Standard execution
1	Body	Ductile cast iron EN-GJS-400-15 EN 1563
2	Disc	Ductile cast iron EN-GJS-400-15 EN 1563 Stainlees steel 1.4401 EN 10088-1
3	Ring	Rubber NBR or EPDM EN ISO 1629
4	Shaft	Stainlees steel 1.4301 EN 10088-1
5, 6 7, 8	Sleeve	Brass CW617N EN 12165; PTFE
9	O-ring	Rubber NBR or EPDM EN ISO 1629
10	Electric actuator	Producer calatogue

DN	PN	L	Lm	A	B	d	D		K		l		n		ISO 5211	F	H	H1	H2	S	a
							PN10	PN16	PN10	PN16	PN10	PN16	PN10	PN16							
[mm]	[bar]	[mm]											[szt]		-	[mm]					
400	10 / 16	102	106	405	254	480	565	580	515	525	28	31	16		F14	282	354	298	754	27	60
500	10 / 16	127	131	535	254	590	670	715	620	650	28	34	20		F14	282	390	355	870	36	65
600	10 / 16	154	158	535	254	688	780	840	725	770	31	37	20		F16	282	390	464	952	36	66
700	10 / 16	165	169	539	254	800	895	910	840		31	37	24		F25	282	392	505	1016	46	66
800	10 / 16	190	195	615	254	900	1015	1025	950		34	41	24		F25	282	417	576	1089	46	66
900	10 / 16	203	208	700	254	1000	1115	1125	1050		34	41	28		F25	282	458	638	1178	55	118
1000	10 / 16	216	223	700	254	1120	1230	1255	1160	1170	37	44	28		F25	282	458	700	1258	55	142
1200	10 / 16	254	263	795	329	1300	1455	1485	1380	1390	41	50	32		F30	384	545	844	1485	-	150

We reserve the rights to modify the production program and the given data without seperate notices due to the permanent company development.

Concentric butterfly valve with electric actuator
wafer

PN10
PN16

WATER

Centric butterfly valve DN200+SQ07+AUTOMATIC 01.2

Centric butterfly valve DN300 +SQ10.2

Product description (standard execution):

- Concentric disc made of stainless steel 1.4401 or ductile cast iron
- EPDM/NBR replaceable loose liner protected against axial displacement
- Stainless steel 1.4021 solid spline (not pinned) shaft with the bottom side seated in blind hole of the body
- Three-slide bearings
- Special shaped loose liner to seal with the shaft crossing
- Additional shaft sealing made of EPDM/NBR o-rings
- For DN350 splined connection from DN400 with pin connections
- Body made of ductile cast iron EN-GJS 400-15
- Actuator connector according to ISO 5211 (ISO top flange)
- Epoxy coating to EN 14901
- End connection according to EN 1092-2 (DIN 2501) pressure PN10; PN16
- Face to face according to EN 558-A1 row20 (DIN 3202)
- Product according to EN 1074-1; EN 1074-2; EN-593
- Product marking according to : EN 19, EN 1074

Application:

Water network and tanks.Transport of industrial water and non agressive liquids.
Working conditions:
temp. up to +70˚C
pressure up to 1.6 MPa.

Test control:

Hydraulic test according to EN 1074-1; EN 1074-2; EN 12266-1
Seat: 1,1 xPN
Body: 1,5 x PN
Operation torque test.

Installation:

DN40-DN250 in any position. Over DN250 actuator from the side. Shaft in horizontal position.

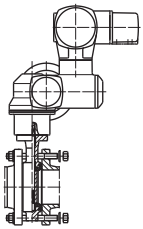

4497SQ

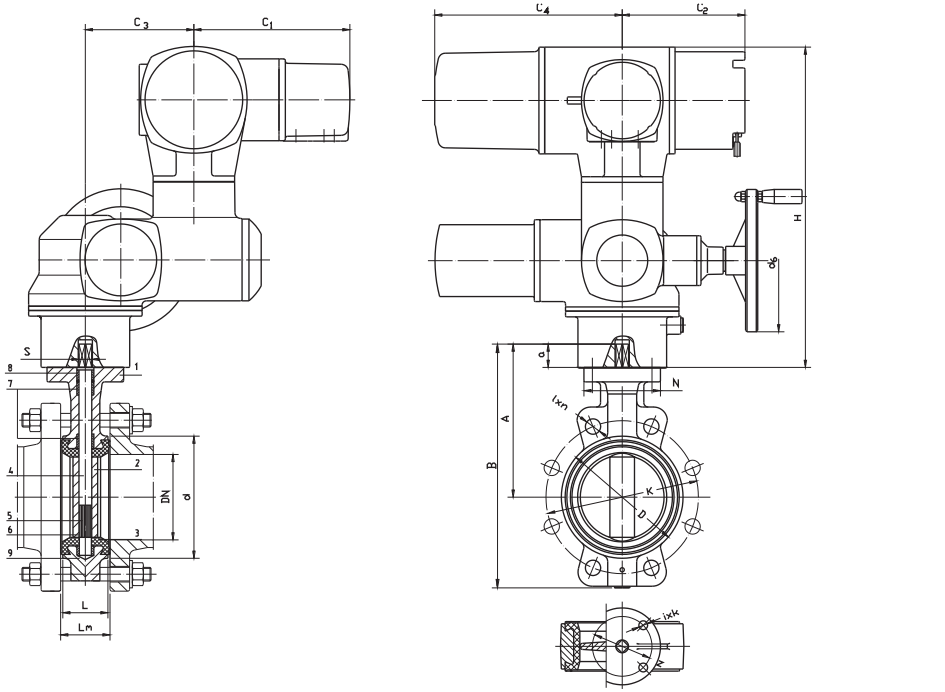

No.	Part	Standard execution
1	Body	Ductile cast iron EN-GJS-400-15 EN 1563
2	Disc	Ductile cast iron EN-GJS-400-15 EN 1563 Stainlees steel 1.4401 EN 10088-1
3	Ring	Rubber NBR or EPDM EN ISO 1629
4	Shaft	Stainlees steel 1.4021 EN 10088-1
5, 6 7, 8	Sleeve	Brass CW617N EN 12165 PTFE
9	O-ring	Rubber NBR or EPDM EN ISO 1629

- other material variants on special request

DN	PN bar	L	Lm	A	B	d	D		K		I		n	ISO 5211	i x k	N	z	S	a	C1	C2	C3	C4	H
							PN10	PN16	PN10	PN16	PN10	PN16	PN10/16											
mm	-	mm											szt.	-						mm				
40	10/16	33	36	121	176	76	150		110		19		4	F05	4x7	90	50	11	28	220	171	143	265	434
50	10/16	43	46	137	222	92	165		125		19		4	F05	4x7	90	50	11	28	220	171	143	265	434
65	10/16	46	49	150	235	106	185		145		19		4	F05	4x7	90	50	11	28	220	171	143	265	434
80	10/16	46	49	160	245	114	200		160		19		8	F05	4x7	90	50	11	30	220	171	143	265	434
100	10/16	52	55	182	280	143	220		180		19		8	F07	4x9	90	70	14	30	220	171	143	265	434
125	10/16	56	59	207	328	170	250		210		19		4	F07	4x9	90	70	14	30	220	171	143	265	434
150	10/16	56	59	223	357	203	285		240		23		4	F07	4x9	90	70	17	30	220	173	153	263	452
200	10/16	60	63	255	418	252	340		295		23		4	F10	4x12	125	102	17	30	220	173	153	263	452
250	10/16	68	72	314	510	306	395	405	350	355	23	28	4	F10	4x12	125	102	22	40	220	173	153	265	452
300	10/16	78	82	342	564	364	445	460	400	410	23	28	4	F10	4x12	125	102	22	45	220	173	153	265	452
350	10/16	78	82	365	640	431	505	520	460	470	23	28	4	F10	4x12	125	102	22	45	220	173	153	265	475
400	10/16	102	106	410	725	480	565	580	515	525	28	31	4	F14	4x18	175	140	27	60	220	173	153	265	510
500	10/16	127	131	490	866	590	670	715	620	650	28	34	4	F14	4x18	175	140	36	65	-	-	-	-	-
600	10/16	154	158	565	1031	688	780	840	725	770	31	37	4	F16	4x22	210	165	36	65	-	-	-	-	-
700	10/16	165	169	610	1120	800	895	910	840	840	31	37	4	F25	8x18	300	254	46	70	-	-	-	-	-

We reserve the rights to modify the production program and the given data without seperate notices due to the permanent company development.

Concentric butterfly valve
wafer

PN10
PN16

WATER

Centric butterfly valve DN80 with lever

Centric butterfly valve DN250 with gear box

Product description (standard execution):

- Concentric disc made of stainless steel 1.4401 or ductile cast iron
- EPDM/NBR replaceable loose liner protected against axial displacement
- Stainless steel 1.4021 solid spline (not pinned) shaft with the bottom side seated in blind hole of the body
- Three-slide bearings
- Special shaped loose liner to seal with the shaft crossing
- Additional shaft sealing made of EPDM/NBR o-rings
- Body made of cast iron EN-GJS 400-15
- With lock lever up to DN200 over with gear box
- For DN350 splined connection from DN400 with pin connections
- Actuator connector according to ISO 5211 (ISO top flange)
- Epoxy coating to EN 14901
- End connection according to EN 1092-2 (DIN 2501), pressure PN10; PN16
- Face to face according to EN 558-A1 row 20 (DIN 3202)
- Product according to EN 1074-1; EN 1074-2; EN-593
- Product marking according to : EN 19; EN 1074

Application:

Water network and tanks.Transport of industrial water
and non agressive liquids.
Working conditions:
temp. up to +70˚C
pressure up to 1.6 MPa.

Execution variant:

With lever for DN200
With Gear box from DN250
With electric or pneumatic actuator
For extension spindle

Test control:

Hydraulic test according to EN 1074-1; EN 1074-2; EN 12266-1
Seat: 1,1 xPN
Body: 1,5 x PN
Operation torque test.

Installation:

DN40-DN250 in any position. Over DN250 shaft in horizontal position

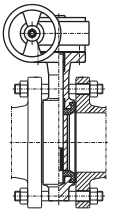

Accessories:

Extension spindle - see: 9010, 9011
Pillar with handwheel - see: 9113
Pillar for electric actuator - see: 9114
Street box - see: 9501

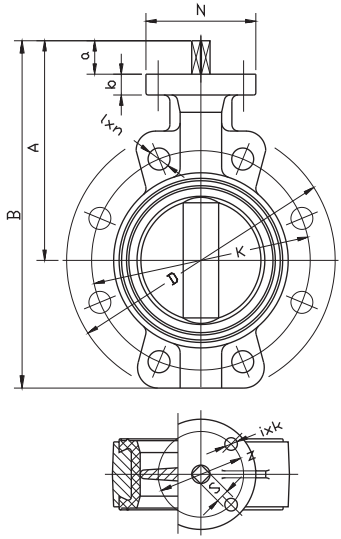

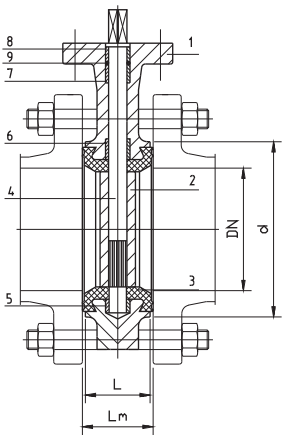

No.	Part	Standard execution
1	Body	Ductile cast iron EN-GJS-400-15 EN 1563
2	Disc	Stainlees steel1.4401 EN 10088-1 Ductile cast iron EN-GJS-400-15 EN 1563
3	Ring	Rubber NBR EPDM EN ISO 1629
4	Shaft	Stainlees steel 1.4021 EN 10088-1
5, 6 7, 8	Sleeve	PTFE BrassCW617N EN 12165
9	O-ring	Rubber NBR EPDM EN ISO 1629

DN	PN			L	Lm	A	B	d	D		K		l		n		ISO 5211	i x k	N	z	S	a	Weight
	10	16	10 / 16						PN10	PN16	PN10	PN16	PN10	PN16	PN10	PN16							
[mm]	[bar]			[mm]											[szt]		-	[mm]					[kg]
40	–	–	v	33	36	121	176	76	150		110		19		4		F05	4x7	65	50	11	28	3
50	–	–	v	43	45	137	222	92	165		125		19		4		F05	4x7	65	50	11	28	4
65	–	–	v	46	49	150	235	106	185		145		19		4		F05	4x7	65	50	11	28	5
80	–	–	v	46	49	160	245	114	200		160		19		8		F05	4x7	65	50	11	30	7
100	–	–	v	52	55	182	280	143	220		180		19		8		F07	4x9	90	70	14	30	8
125	–	–	v	56	59	207	328	170	250		210		19		8		F07	4x9	90	70	14	30	8
150	–	–	v	56	59	223	357	203	285		240		23		8		F07	4x9	90	70	17	30	13
200	–	–	v	60	63	255	418	252	340		295		23		12		F10	4x12	125	102	17	30	20
250	–	–	v	68	72	314	510	306	395	405	350	355	23	28	12		F10	4x12	125	102	22	40	29
300	–	–	v	78	82	342	564	364	445	460	400	410	23	28	12		F10	4x12	125	102	22	45	40
350	–	–	v	78	82	365	640	431	505	520	460	470	23	28	16		F10	4x12	125	102	22	45	47
400	–	–	v	102	106	410	725	480	565	580	515	525	28	31	16		F14	4x18	175	140	27	60	98
450	–	–	v	114	118	451	775	525	615	640	565	585	28	31	20		F14	4x18	175	140	27	60	127
500	–	–	v	127	131	490	866	590	670	715	620	650	28	34	20		F14	4x18	175	140	36	65	185
600	–	–	v	154	158	565	1031	688	780	840	725	770	31	37	20		F16	4x22	210	165	36	66	275
700	v	v	–	165	169	610	1120	800	895	910	840		31	37	24		F25	8x18	300	254	46	66	394
800	v	v	–	190	195	738	1314	900	1015	1025	950		34	41	24		F25	8x18	300	254	46	66	506
900	v	v	–	203	208	838	1475	1000	1115	1125	1050		34	41	28		F25	8x18	300	254	55	118	756
1000	v	v	–	216	223	942	1643	1120	1230	1255	1160	1170	37	44	28		F25	8x18	300	254	55	142	804
1200	v	v	–	254	263	1090	1934	1300	1455	1485	1380	1390	41	50	32		F30	8x22	350	298	-	150	1251

We reserve the rights to modify the production program and the given data without seperate notices due to the permanent company development.

Butterfly check valve
with damper

PN10
PN16

WATER

Butterfly check valve DN600

Product description (standard execution):

- Eccentric disc made of ductile cast iron EN-GSJ 400-15
- Installation on horizontal and vertical pipeline
- Slide bearings made of bronze and PTFE
- Body sealing: metal ring + EPDM NBR or FKM - interchangeable
- Additional shaft sealing made of NBR, EPDM or FKM o-rings
- Body made of ductile cast iron EN-GSJ 400-15
- Possible execution : I - horizontal line, II – vertical line - flow from the bottom, III- vertical line – flow form the top
- Lever location: right side (P) and left side (L) for horizontal pipeline
- Epoxy coating minimum 250 microns or polyvinyl coating minimum 100 microns according to EN 14901
- End connection according to EN 1092-2 (DIN 2501) pressure PN10; PN16
- Face to face according to producer documentation JAFAR
- Product according to EN 1074-1; EN 1074-3
- Product marking according to : EN 19, EN 1074

Application:

Water network and tanks.Transport of industrial water and non agressive liquids.
Working conditions:
temp. up to +70˚C
pressure up to 1.6 MPa.

Test control:

Hydraulic test according to EN 1074-1; EN 1074-2; EN 12266-1
Seat: 1,1 xPN
Body: 1,5 x PN

Installation:

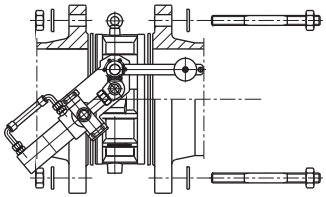

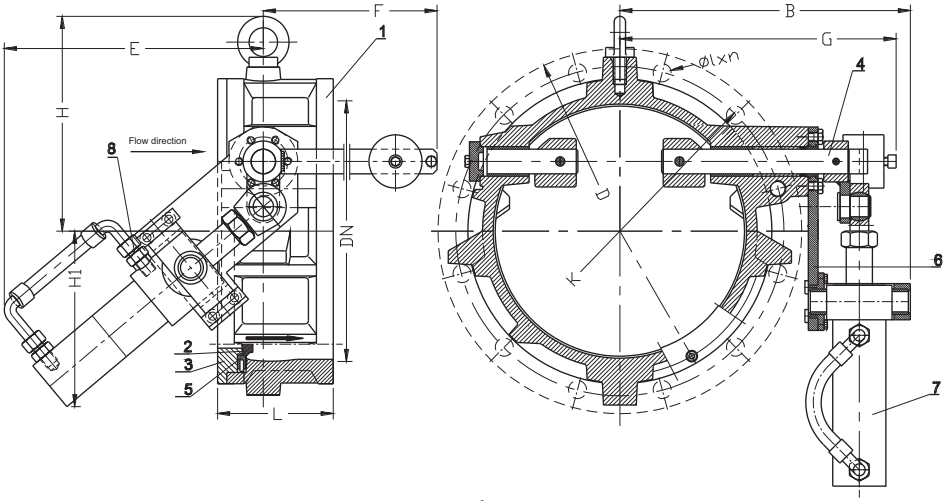

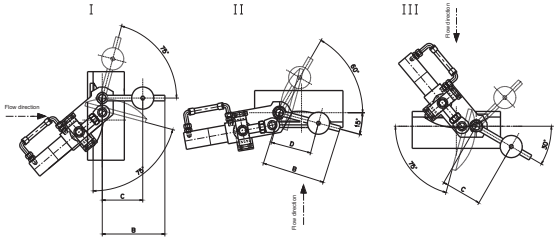

No.	Part	Standard execution
1	Body	Ductile cast iron EN-GJS-400-15 EN 1563
2	Disc	Ductile cast iron EN-GJS-400-15 EN 1563
3	Ring	Ductile cast iron EN-GJS-400-15 EN 1563
4	Shaft	Steel 1.4021 EN 10088-1
5	Sealing ring	Rubber: NBR, EPDM, FKM EN ISO 1629
6	Absorber plate	Steel 1.0037 EN 10025
7	Silencer damper	By card manufacturer

DN	PN	L	H1	B	E	H	F	G	D	K	H1	l x n PN16 (PN10)	Weight
[mm]	[bar]	[mm]										[mm]	[kg]
300	10/16	160	214	370	312	276	300	338	460	410	214	28(23)x12	86
350	10/16	180	226	400	320	306	350	367	520	470	430	28x(23)x16	97
400	10/16	200	283	430	350	346	400	390	580	525	482	31(28)x16	135
500	10/16	240	313	538	430	404	500	475	715	650	610	34(28)x20	180
600	10/16	260	367	600	457	458	600	563	840	770	720	37(31)x20	280
800	10/16	241	477	740	539	530	900	725	1025	950	324	41(34)x24	535

We reserve the rights to modify the production program and the given data without seperate notices due to the permanent company development.

Butterfly check valve
with counterweight

PN10
PN16

WATER

Butterfly check valve DN300

Product description (standard execution):

- Eccentric disc made of ductile cast iron EN-GSJ 400-15
- Installation on horizontal and vertical pipeline
- Slide bearings made of bronze and PTFE
- Body sealing: metal ring + EPDM NBR or FKM - interchangeable
- Additional shaft sealing made of NBR, EPDM or FKM o-rings
- Body made of ductile cast iron EN-GSJ 400-15
- Possible execution : I - horizontal line, II – vertical line - flow from the bottom, III- vertical line – flow form the top
- Lever location: right side (P) and left side (L) for horizontal pipeline
- Epoxy coating minimum 250 microns or polyvinyl coating minimum 100 microns according to EN 14901
- End connection according to EN 1092-2 (DIN 2501) pressure PN10; PN16
- Face to face according to producer documentation JAFAR
- Product according to EN 1074-1; EN 1074-3
- Product marking according to : EN 19, EN 1074

Application:

Water network and tanks.Transport of industrial water and non agressive liquids.
Working conditions:
temp. up to +70˚C
pressure up to 1.6 MPa.

Execution variant:

With damper

Test control:

Hydraulic test according to EN 1074-1; EN 1074-2; EN 12266-1
Seat: 1,1 xPN
Body: 1,5 x PN

Installation:

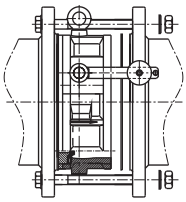

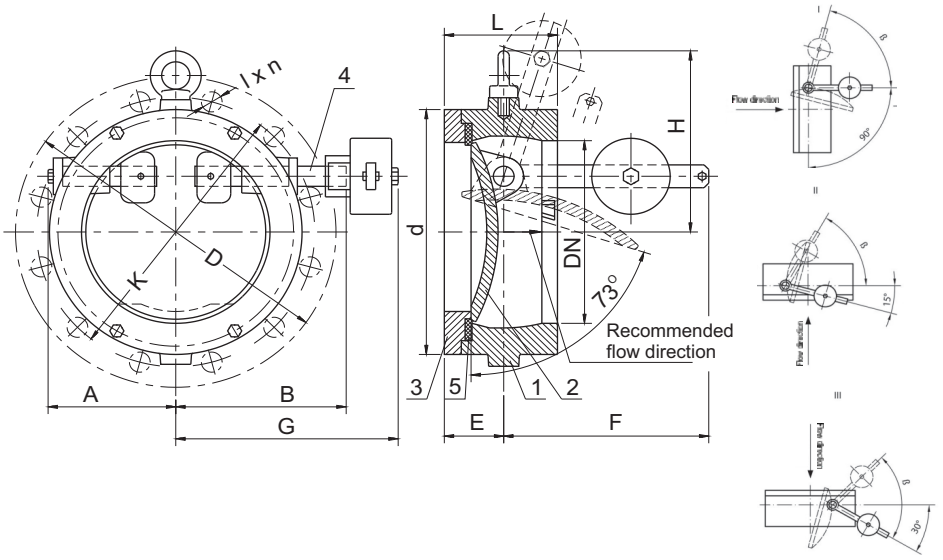

No.	Part	Standard execution
1	Body	Ductile cast iron EN-GJS-400-15 EN 1563
2	Disc	Ductile cast iron EN-GJS-400-15 EN 1563
3	Ring	Ductile cast iron EN-GJS-400-15 EN 1563
4	Shaft	Steel 1.4021 EN 10088-1
5	Sealing ring	Rubber: NBR, EPDM, FKM EN ISO 1629

- other material variants on special request

DN	PN	L	A	B	E	H	F	G	D	K	d	l	n	Weight
[mm]	[bar]	[mm]											[szt]	[kg]
250	10 / 16	135	159	222	68	231	250	290	405	355	320	23/28	12	35
300	10 / 16	160	186	245	75	276	300	314	460	410	370	23/28	12	51
350	10 / 16	180	226	277	88	306	350	367	520	470	430	23/28	16	75
400	10 / 16	200	283	309	100	346	400	390	580	525	482	28/31	16	97
500	10 / 16	240	313	385	130	404	500	475	715	650	610	28/34	20	157
600	10 / 16	260	367	454	147	458	600	563	840	770	720	31/37	20	255
800	10 / 16	241	415	515	140	530	900	630	1025	950	901	34/41	24	453

We reserve the rights to modify the production program and the given data without seperate notices due to the permanent company development.

Ball valve
full bore flanged

PN 16
PN 25
PN 40

WATER

Ball valve DN50

Product description (standard execution):

- Ball seat made of PTFE + C, interchangeable
- The ball is made of stainless steel in grade 1.4301
- The construction of the valve enables disassambling
- Spindle made of stainless steel improved in grade 1.4021
- EPDM or Viton O-ring spindle seal + Teflon ring
- Interchangeable spindle seals
- Corrosion protection according to EN 14901
- Flange connections according to EN 1092-2 (DIN 2501), pressure PN16, PN25, PN40
- Face to face according to producer documentation JAFAR
- Body made of ductile cast iron EN-GJS 400-15 or steel L360NB (1.0582), P355 (1.0562), S235JR (1.0037)
- Product according to EN 1983
- Product marking according to : EN 19, EN 1074

Application:

Industrial water lines, heating instalations and non agresive liquids.
Working conditions:
temp. from -20˚C up +160˚C
pressure up to 4.0 MPa

Execution variant:

Ductile cast iron EN-GJS 350-22-LT
For actuator
With electric or pneumatic actuator
With gear box
With inductive sensors

Test control:

Water pressure test according to EN 1074-1; EN 1074- 2; EN 12266-1
Seat: 1,1 x PN
Body: 1,5 x PN
Operation torque test

Installation:

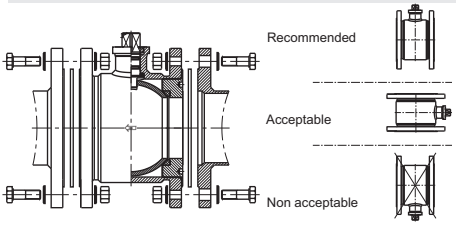

Accessories:

Pillar with handwheel - see: 9113
Pillar for electric actuator - see: 9114
Street box - see: 9305

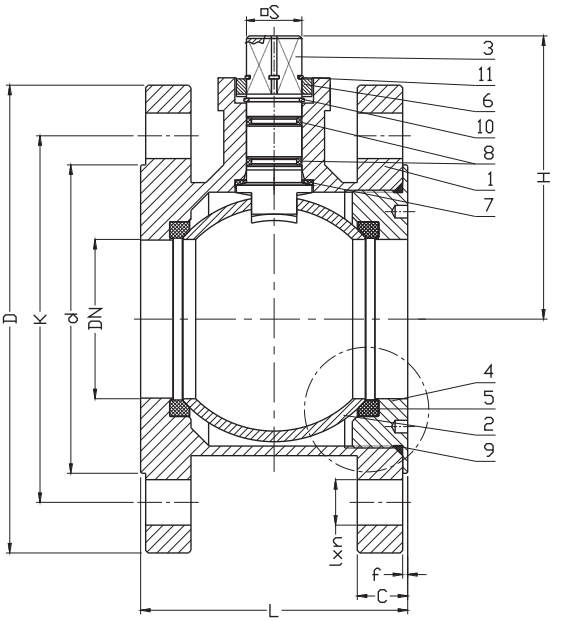

No.	Part	Standard execution
1	Body	Steel L360NB (1.0582); P355 (1.0562) EN ISO 3183 Steel S235JR (1.0037) EN 10025-2 ductile cast iron EN-GJS 400-15 or EN-GJS 350-22 LT EN 1563
2	Ball	Steel 1.4301 EN 10088-1
3	Spindle	Steel 1.4021 EN 10088-1
4	Screw	Steel 1.0037 + Zn EN 10025-2
5	Ball seat	PTFE + C EN ISO 13000-1
6	Limiter	Steel 1.4301 EN 10088-1
7	Gasket	PTFE + C EN ISO 13000-1
8 9	O-ring	EPDM VITON
10 11	Ring	DIN 471

- other material variants on special request

DN	L	PN	D	d	K	lxn	H	S	c	f	Kv	Weight
mm		bar	mm				mm				m3/h	kg
Cast iron												
40	77	16	150	88	110	4x19	90	11	19	2	105	5,4
50	86	16	165	102	125	4x19	98	17	19	2	163	6,8
65	106	16	185	122	145	8x19	112	17	19	2	275	9,7
80	120	16	200	138	160	8x19	130	22	19	2	418	11,2
100	160	16	220	158	180	8xM16	147	22	19	2	654	17,3
125	186	16	250	188	210	8xM16	164	22	19	2	1023	24,5
Steel												
40	77	16/25/40	150	88	110	4x18	90	11	18	2	105	4,6
50	86	16/25/40	165	102	125	4x18	98	17	20	2	163	6,1
65	106	16/25/40	185	122	145	8x18	112	17	22	2	275	8,2
80	120	16/25/40	200	138	160	8x18	130	22	24	2	418	9,5
100	160	25/40	235	162	190	8xM20	147	22	26	2	654	16,6
125	186	25/40	270	188	220	8xM24	164	22	28	2	1023	23,5

We reserve the rights to modify the production program and the given data without separate notices due to the permanent company development.

Ball check valve
flanged

PN10
PN16

SEWAGE

WATER

Ball check valve 6516 DN500

Ball check valve 6516 DN100

Product description (standard execution):

- Straight full bore
- Simple and compact design – high durability
- Flange connection according to EN 1092-2 (DIN 2501) pressure PN10; PN16
- Face to face row 48 according to EN 558+A1 (DIN3202)
- Body and bonnet made of ductile cast iron EN-GJS 400-15, EN 1563 (DIN 1693)
- NBR/EPDM fully galvanized bowl (made of aluminum alloy or cast iron)
- Body-bonnet o-ring gasket: NBR/EPDM
- Product intended for use in the pump system installations to flow cut
- Epoxy coating minimum 250 microns according to EN 14901
- Body bonnet Zinc coated or stainless steel screws protected by wax or plastic caps
- Products according to EN 12050-4; EN 1074-1 and EN 1074-3
- Products 6516 designed for use in pumping/pressurized installations
- Products 6526 designed for use in gravity based installations
- Products marking according to EN 19; EN 1074

Application:

Water and sewage networks and tanks. Transport of non agressive liquids.
Working conditions:
temp. up +70°C
working pressure up to 1.6 MPa

Test control:

Water pressure test according to EN 1074-1; EN 1074-3; EN 12266-1
Seat: 0,5 to 1,1 xPN
Body: 1,5 x PN

Execution variant:

SS body bonnet screws
With drain plug (A)
With drain plug with vent mechanism (B)

Installation:

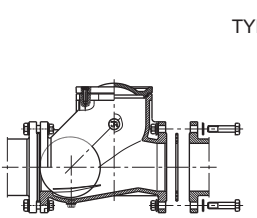

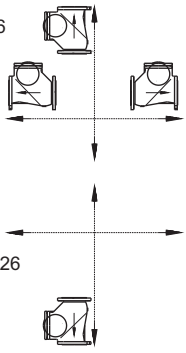

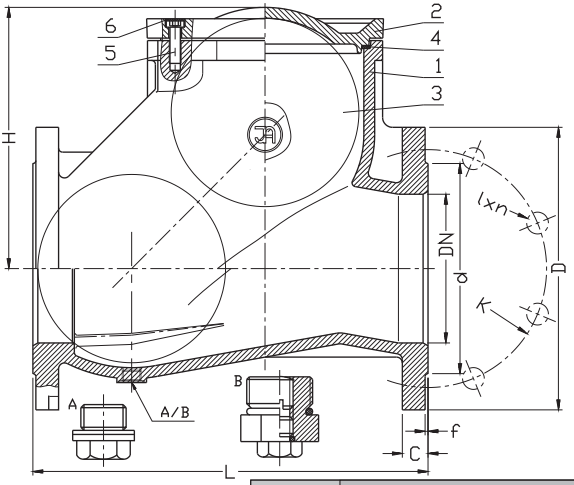

No.	Part	Standard execution
1	Body	Ductile cast iron EN-GJS-400-15 EN 1563
2	Bonnet	Ductile cast iron EN-GJS-400-15 EN 1563
3	Ball	Ductile cast iron EN-GJS-400-15 EN 1563 Aluminium AlSi EN 1706 Rubber NBR or EPDM EN-ISO 1629
4	Gasket	Rubber NBR or EPDM EN-ISO 1629
5	Screw	Steel Fe/Zn5 Stainless steel EN ISO 4762
6	Screw stopper	Wax

- other material variants on special request

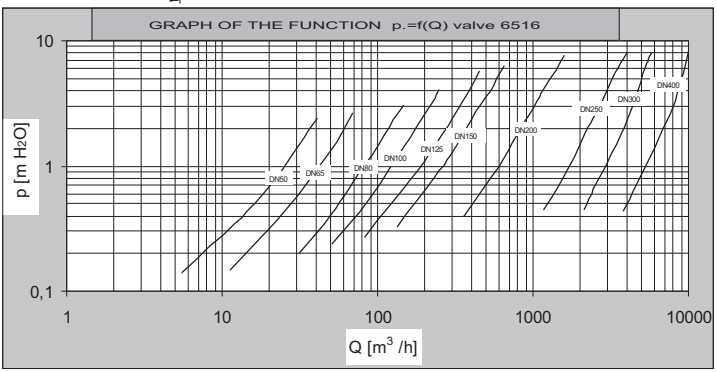

DN	PN	L szereg 48	H	d	D	K	l	C	f	n	Weight	Weight
[mm]	[bar]	[mm]								-	6516 [kg]	6526 [kg]
50	16	200	113	102	165	125	19	19	3	4	8	8
65	16	240	126	122	185	145	19	19	3	4	13	12
80	16	260	162	138	200	160	19	19	3	8	17	17
100	16	300	194	158	220	180	19	19	3	8	24	22
125	16	350	214	188	250	210	19	19	3	8	34	33
150	16	400	260	212	285	240	23	19	3	8	52	48
200	16	500	320	268	340	295	23	20	3	12	83	74
250	16	600	365	319	405	355	28	22	3	12	136	106
300	16	700	427	370	460	410	28	25	4	12	229	203
200	10	500	320	268	340	295	23	20	3	8	83	74
250	10	600	365	319	405	350	23	22	3	12	136	106
300	10	700	427	370	460	400	23	25	4	12	229	203
350*	10	800	427	429	520	460	23	27	4	16	260	237
400	10	900	537	480	580	515	28	28	4	16	395	-
500	10	1100	650	582	670	620	28	32	4	20	560	-

* reduced bore

We reserve the rights to modify the production program and the given data without separate notices due to the permanent company development

Swing check valve
flanged

PN10
PN16

SEWAGE

WATER

Check flap valve DN80

Product description (standard execution):

- Straight full bore
- Compact design - high tightness
- Maintenance free
- Body, flap and cover made of gray cast iron EN-GJL 250 EN 1561
- Hull ring made of CW617N PN-EN 12165
- Flange connection according to EN 1092-2 (DIN 2501) pressure PN10, Pn16
- Face to face row 48 according to EN 558+A1 (DIN3202)
- Body and bonnet made of grey iron EN-GJL 250; EN 1561
- Body-bonnet graphite gasket
- Corrosion protection of epoxy resin coating, minimum 250 microns according to EN 14901
- Body-bonnet zinc coated or stainless steel screws
- Product according to EN 1074-1; EN 1074-3

Application:

Sewage, rainwater, industrial steam and other inert fluids installations with working pressure up to 1.6 MPa and temperature range up to + 82 ° C (NBR rubber seal) up to + 120 ° C (EPDM brass seal)

Test control:

Water pressure test according to EN 1074-1; EN 1074-2; EN 12266-1
Seat: 0,5 to 1,1 xPN
Body: 1,5 x PN

Installation:

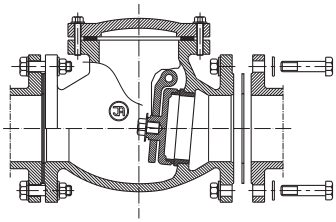

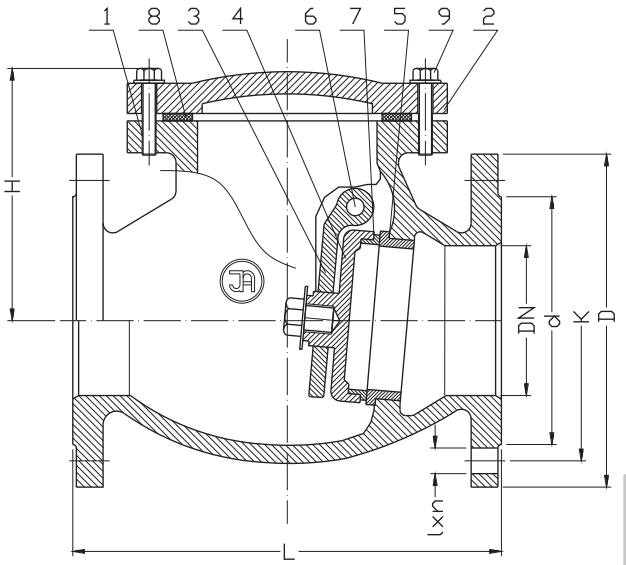

No.	Part	Standard execution
1	Body	Grey iron EN-GJL-250 EN 1561
2	Bonnet	Grey iron EN-GJL-250 EN 1561
3	Lever flap	Ductile cast iron EN-GJS-500-7 EN 1563
4	Flap	Grey iron EN-GJL-250 EN 1561
5	Ring body	Brass CW617N EN 12165
6	Pin flap	Stainless steel 1.4021 EN 10088-1
7	Seat gasket	Rubber EPDM, NBR ISO 1629 Brass CW617N EN 12165
8	Gasket	Non-asbestos gasket Graphite
9	Screw	Stainless FeZn ISO 4017

DN	PN	L	H	D	d	K	l x n	Weight
[mm]	[bar]	[mm]						[kg]
50	16	200	120	165	102	125	19x4	11
65	16	240	125	185	122	145	19x4	13
80	16	260	147	200	138	160	19x8	17
100	16	300	158	220	158	180	19x8	25
125	16	350	188	250	188	210	19x8	40
150	16	400	193	285	212	240	23x8	50
200	16	500	250	340	268	295	23x8(12)*	58
250	16	600	300	405	320	355	28x12	118
300	16	700	342	460	370	410	28x12	182

*) - 10 bar

We reserve the rights to modify the production program and the given data without separate notices due to the permanent company development

Nozzle type check valve
flanged

PN10
PN16

SEWAGE

WATER

Non return check valve DN80

Product description (standard execution):

- Any-position installation approved
- Compact design - high tightness
- Maintenance free
- Shaft made of stainless steel 1.4305 according to EN 10088-1
- Sliding sleeve made of brass bronze or stainless steel
- Flange connection according to EN 1092-2 (DIN 2501) pressure PN10, PN16
- Face to face according to producer documentation JAFAR
- Body, disc and slideway made of grey iron EN-GJL 250; EN 1561
- Epoxy coating to EN 14901
- Product according to EN 1074-1; EN 1074-3
- Product marking according to EN 19; EN 1074

Application:

Water and sewage networks and tanks. Transport of non agressive liquids.
Working conditions:
temp. up +70°C
working pressure up to 1.6 MPa

Test control:

Water pressure test according to EN 1074-1; EN 1074-2; EN 12266-1
Seat: 0,5 to 1,1 xPN
Body: 1,5 x PN

Installation:

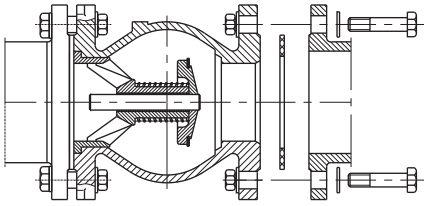

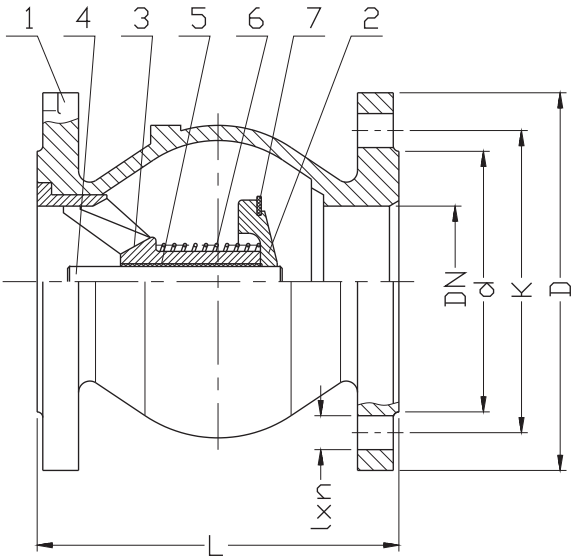

No.	Part	Standard execution
1	Body	Grey iron EN-GJL-250 EN 1561
2	Valve plug DN50-DN125	Brass CW617N EN 12165
2	Valve plug DN150- DN250	Grey iron EN-GJL-250 EN 1561
3	Centering DN50-DN100	Brass CW617N EN 12165
3	Centering DN125- DN250	Grey iron EN-GJL-250 EN 1561
4	Stem	Stainlees steel 1.4305 EN 10088-1
5	Sleeve	Brass CW617N EN 12165
6	Spring	Stainlees steel 1.4305 EN 10088-1
7	Gasket	Rubber NBR EN ISO 1629

DN	k	l x n	D	L	d	Kv	Weight
	PN16 (PN10)						
[mm]						[m^3/h]	[kg]
50	125	4x19	165	100	98	100	5,7
65	145	4x19	185	120	118	160	8,7
80	160	8x19	200	136	132	230	10,8
100	180	8x19	220	175	156	390	13,5
125	210	8x19	250	200	184	625	21,0
150	240	8x23	285	234	211	900	30,0
200	295	12x23 (8x23)	340	300	260	1100	49,0
250	355 (350)	12x28 (12x23)	405	370	319	1800	81,0

We reserve the rights to modify the production program and the given data without separate notices due to the permanent company development

Check valve
interflanged

PN10
PN16

SEWAGE

WATER

Chack valve DN100

Product description (standard execution):

- O-ring disc sealing
- Disc spring made of stainless steel
- Maintenance free
- Shaft made according to 1.4305 EN 10088-1
- Face to face according to producer documentation
- Body and disc made of steel 1.4301 or 1.0038/Zn
- Products according to EN 1074-1; EN 1074-3

Application:

Water and sewage networks and tanks. Transport of non agressive liquids.
Working conditions:
temp. up +70°C
working pressure up to 1.6 MPa

Test control:

Water pressure test according to EN 1074-1; EN 1074-3; EN 12266-1
Seat: 0,5 to 1,1 xPN
Body: 1,5 x PN

Installation:

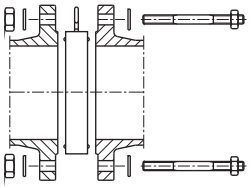

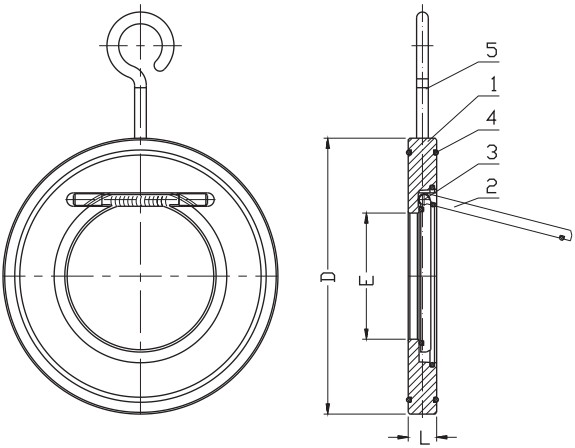

No.	Part	Standard execution
1	Body	Steel 1.0037 EN 10025-2 Steel 1.4310 EN 10088-1
2	Flap	Steel 1.0037 EN 10025-2 Steel 1.4310 EN 10088-1
3	Spring(*)	50S2JR/Zn 74/H-84032 Steel 1.4310 EN 10088-1
4	Seal	Rubber EPDM EN-ISO 1629
5	Screw	Steel 1.0037 EN 10025-2 Steel 1.4310 EN 10088-1

(*) - other material variants on special request

DN	D	E	L	Weight
[mm]				[kg]
40	94	21	15	0,5
50	109	30	15	0,8
65	129	41	15	1,3
80	144	50	17	1,5
100	164	75	17	2,3
125	195	96	18	3,0
150	221	96	18	4,5
200	276	155	28,5	9,3
250	330	200	33,5	15,0
300	384	240	38	24,0

We reserve the rights to modify the production program and the given data without separate notices due to the permanent company development.

Dual plates swing check valve
interflanged

PN10
PN16

WATER

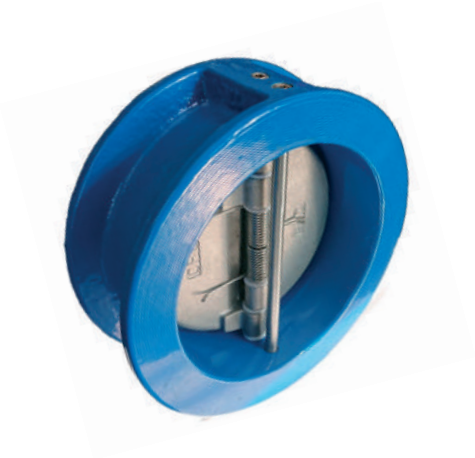

Product description (standard execution):

- Simple and compact design – high durability
- Silent and reliable operation
- O-ring disc sealing
- Disc spring made of stainless steel
- Maintenance free
- Shaft made of stainless steel
- Face to face according to producer documentation
- Body made of grey iron EN-GJL 250; EN 1561
- Epoxy coating minimum 250 microns according to EN 14901
- Product according to EN 1074-1; EN 1074-3
- Product marking according to EN 19; EN 1074

Application:

Potable water, other chemically non-aggressive liquids.
Working conditions:
temp. up +120°C
working pressure up to 1.6 MPa

Test control:

Water pressure test according to EN 1074-1; EN 1074-3; EN 12266-1
Seat: 0,5 to 1,1 xPN
Body: 1,5 x PN

Installation:

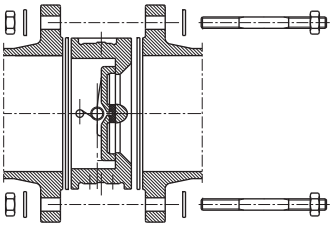

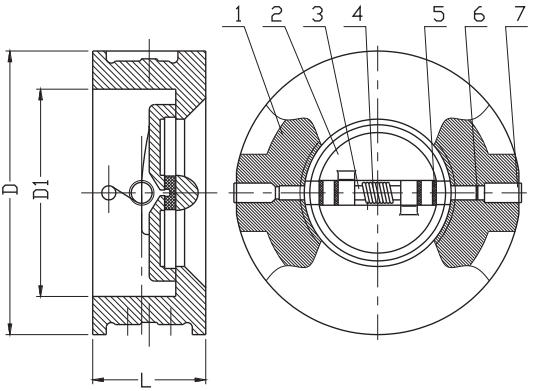

No.	Part	Standard execution
1	Body	Grey iron EN-GJL-250 EN 1561
2	Flap	Stainless steel 1.4401 EN 10088-1
3	Stem	Stainless steel 1.4021 EN 10088-1
4	Spring	Stainless steel 1.4301 EN 10088-1
5	Washer	PTFE Catalogue producer
6	O-ring	Rubber EPDM EN-ISO 1629
7	Nut	Stainless steel 1.4301 EN 10088-1

DN	D	D1	L	Weight
[mm]				[kg]
50	102	66	54	1,8
65	121	78	54	2,4
80	134	90	57	3,2
100	172	115	64	4,8
125	194	141	70	7,3
150	220	170	76	10
200	277	210	95	14,2
250	337	273	108	23,6
300	407	324	143	37,5
350	447	356	184	62
400	511	406	191	74
450	546	457	203	100
500	602	508	213	155
600	715	600	222	215

We reserve the rights to modify the production program and the given data without separate notices due to the permanent company development.

Ball check valve
flanged

PN10
PN16

SEWAGE

WATER

Ball check valve 6616 DN40

Product description (standard execution):

- Silent and reliable operation
- Simple and compact design – high durability
- Thread connections according to EN 10226-1
- Face to face according to producer documentation JAFAR
- Body and bonnet made of ductile cast iron EN-GJS 400-15; EN 1563
- NBR/EPDM fully galvanized bowl (made of aluminum alloy or cast iron)
- Body-bonnet O-ring gasket: NBR/EPDM
- Epoxy coating minimum 250 microns according to EN ISO 14901
- Body bonnet steel screws 1.0038/Zn protected by wax or plastic caps
- Product 6616 designed for use in pumping/pressurized installations
- Product 6626 designed for use in gravity based installations
- Product according to EN 1074-1; EN 1074-3
- Product marking according to EN 19; EN 1074

Application:

Water and sewage networks and tanks. Transport of non agressive liquids.
Working conditions:
temp. up +70°C
working pressure up to 1.6 MPa

Test control:

Water pressure test according to EN 1074-1; EN 1074-3; EN 12266-1
Seat: 0,5 to 1,1 xPN
Body: 1,5 x PN

Execution variant:

SS body bonnet screws
With drain plug (A)
With drain plug with vent mechanism (B)

Installation:

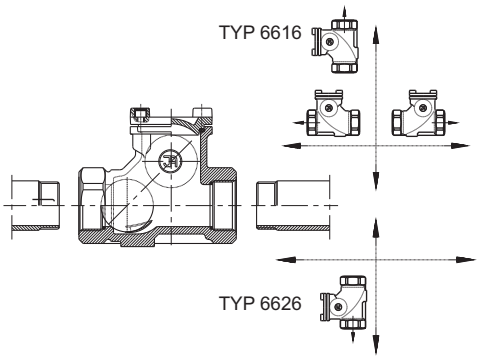

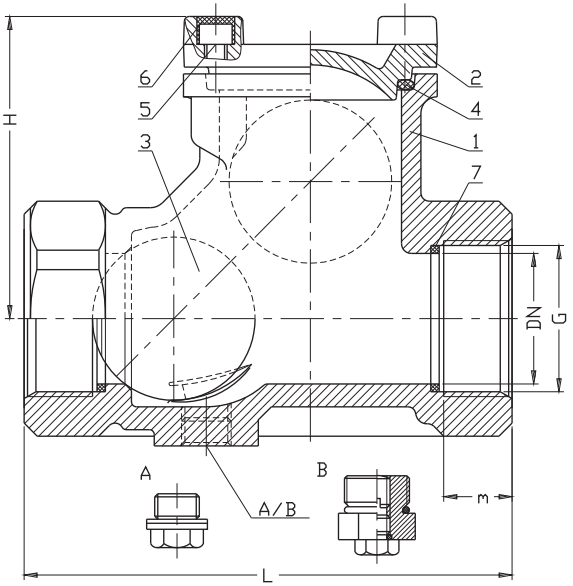

No.	Part	Standard execution
1	Body	Ductile cast iron EN-GJS-400-15; EN 1563
2	Bonnet	Ductile cast iron EN-GJS-400-15; EN 1563
3	Ball	Aluminium AlSi EN 1706 Rubber NBR or EPDM EN-ISO 1629
4	Gasket	Rubber NBR or EPDM EN-ISO 1629
5	Screw	Steel Fe/Zn5 Stainless steel EN ISO 4762
6	Screw stopper	Wax
7	Gasket	Rubber NBR or EPDM EN-ISO 1629

DN	G	L	m	H	Weight	Weight
[mm]	[cal]	[mm]			6616 [kg]	6626 [kg]
25	1"	120	18	75	1,7	-
32	5/4"	140	18	75	2,2	-
40	6/4"	150	20	89	3,1	-
50	2"	220	35	113	5,0	4,2

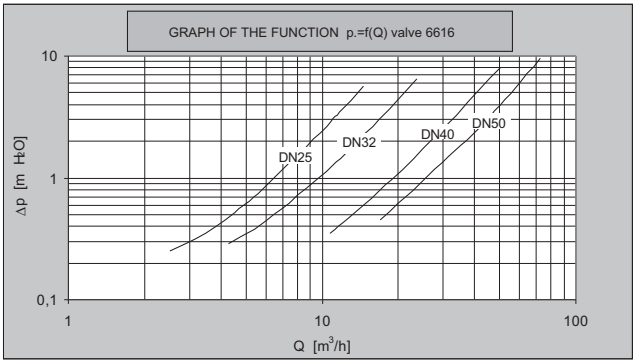

We reserve the rights to modify the production program and the given data without separate notices due to the permanent company development.

Pressure reducing valve
flanged

PN10
PN16

WATER

Pressure reducing valve type 106 DN100

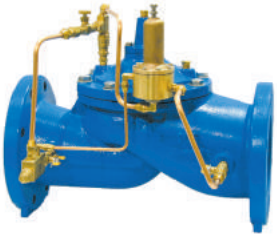

Pressure reducing valve type 206 DN100

Product description (standard execution):

- Automatic pressure reduction and stabilization at given level - regardless of the inlet pressure
- Control system equipped with a pilot valve, pressure gauges for work control
- Possibility of installation in underground and overground pipelines up to DN 150 inclusive
- Epoxy coating to EN 14901
- Body and bonnet made of ductile cast iron EN-GJS 400-15; EN 1563
- Rolled membrane construction guarantee flow stability at low pressures
- Hydraulic main valve with control circuit
- Separate removable spindle adapter reducing the risk of spindle bending
- Shaft and disc made of stainless steel
- Flange connection according to EN 1092-2 (DIN2501) pressure PN16; PN25; PN40
- Face to face according to producer documentation
- Product marking according to EN 19; EN 1074

Application:

Potable water, industrial water and other inert fluids in conditions requiring reduction of pressure. Working conditions:
temp. from -20°C up +90°C
working pressure up to 4.0 MPa

Test control:

Water pressure test according to EN 1074-1; EN 1074-2; EN 12266-1
Seat: 0,5 to 1,1 xPN
Body: 1,5 x PN

Execution variant:

RPS - pressure retaining valve
With valve as hydraulic shock silencer made of stainless steel 1.4301

Installation:

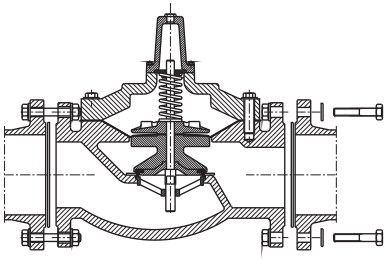

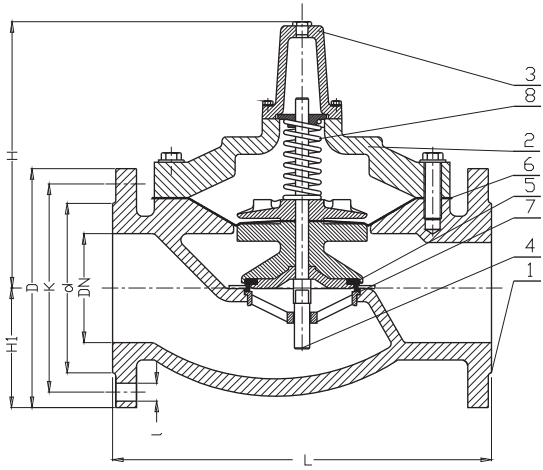

No.	Part	Standard execution
1	Body	Ductile cast iron EN-GJS-400-15 EN 1563
2	Bonnet	Ductile cast iron EN-GJS-400-15 EN 1563
3	Cover stem	Ductile cast iron EN-GJS-400-15 EN 1563
4	Stem	Stainless steel 1.4021 EN 10088-1
5	Flap	Stainless steel 1.4021 EN 10088-1
6	Membrane	Rubber EPDM EN-ISO 1629
7	Ring	Stainless steel 1.4301 EN 10088-1
8	Spring	Stainless steel 1.4301 EN 10088-1

DN	L			H1			H	D		K		d	C	l		The thread in the body	Cap covers stem	The thread in the cover	Weight
	BSPT	PN10 PN16	PN25 PN40	BSPT	PN10 PN16	PN25 PN40		PN10 PN16	PN25 PN40	PN10 PN16	PN25 PN40			PN10 PN16	PN25 PN40				
	[mm]																[cal]		[kg]
15	89	-	-	31	-	-	78	95	95	65	65	46	76	4	4	1/4"	1/4"	-	5,0
20	89	-	-	31	-	-	78	105	105	75	75	56	76	4	4	1/4"	1/4"	-	5,0
25	171	-	-	64	-	-	111	115	115	85	85	65	124	4	4	3/8"	3/8"	3/8"	9,0
32	171	-	-	64	-	-	111	140	140	100	100	76	124	4	4	3/8"	3/8"	3/8"	9,0
40	171	229	229	64	83	83	111	150	150	110	110	84	156	4	4	3/8"	3/8"	3/8"	9,0
50	238	238	238	70	76	76	121	165	165	125	125	99	152	4	4	3/8"	3/8"	3/8"	18,0
65	279	279	279	86	89	89	191	185	185	145	145	118	208	4	8	3/8"	3/8"	3/8"	29,0
80	343	318	318	93	100	100	203	200	200	160	160	132	235	8	8	3/8"	3/8"	3/8"	45,0
100	-	381	397	-	117	129	232	220	235	180	190	156	276	8	8	3/8"	3/8"	3/8"	79,0
150	-	508	533	-	142	161	346	285	300	240	250	211	425	8	8	3/8"	3/8"	1/2"	181,0
200	-	645	670	-	200	200	455	340	360	295	310	266	409	12	12	1/2"	3/8"	1/2"	295,0
250	-	756	790	-	216	243	592	405	425	355	370	319	562	12	12	3/4"	3/4"	3/4"	480,0
300	-	864	864	-	241	241	679	460	485	410	430	370	660	12	16	3/4"	3/4"	3/4"	590,0
350	-	787	826	-	267	292	681	520	555	460	490	429	660	16	16	3/4"	3/4"	3/4"	635,0
400	-	1051	1105	-	298	324	798	580	620	525	550	480	813	16	16	3/4"	3/4"	3/4"	1043,0
500	-	1321	1362	-	367	400	902	715	730	650	660	609	889	20	20	3/4"	3/4"	3/4"	1565,0
600	-	1562	1607	-	435	499	1162	840	845	770	770	720	1262	20	20	3/4"	3/4"	3/4"	2268,0
900	-	1930	1981	-	597	648	1550	1125	1185	1050	1090	1001	1422	28	28	1"	1"	1"	6124,0

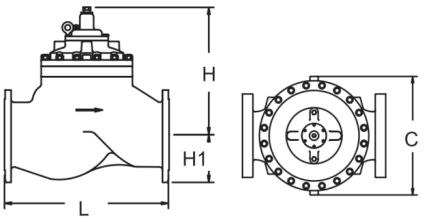

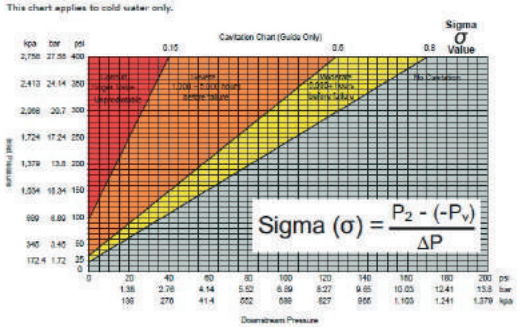

We reserve the rights to modify the production program and the given data without separate notices due to the permanent company development.

Air release valve
single orifice

PN10
PN16

WATER

Relieve and areation valve DN100

Product description (standard execution):

- Circumferential ball sealing
- Control cork allows flushing without disassembling of the bonnet
- Minimum operating pressure equal to atmospheric pressure
- Fully EPDM vulcanized aluminum ball (AlSi)
- Threaded vent bonnet hole
- Body bonnet made of ductile cast iron EN-GJS 400-15; EN 1563
- Stainless steel A2 body bonnet screws
- Epoxy coating minimum 250 microns according to EN 14901
- Product according to EN 1074-4
- Flange connection and connector according EN 1092-2 (DIN2501) or threaded according EN 10226-1 pressure PN10, PN16
- Product marking according to: EN 19; EN 1074

Application:

Air release valve intended for use at water lines - for air release and aeration of the pipelines. Working conditions: temp. up +70°C

Test control:

Water pressure test according to EN 1074-1; EN 1074-2; EN 12266-1
Seat: 1,1 xPN
Body: 1,5 x PN

Installation:

Recommended to mount in vertical position at highest / at the point of inflection of the pipeline

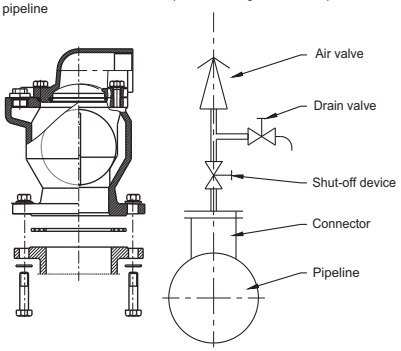

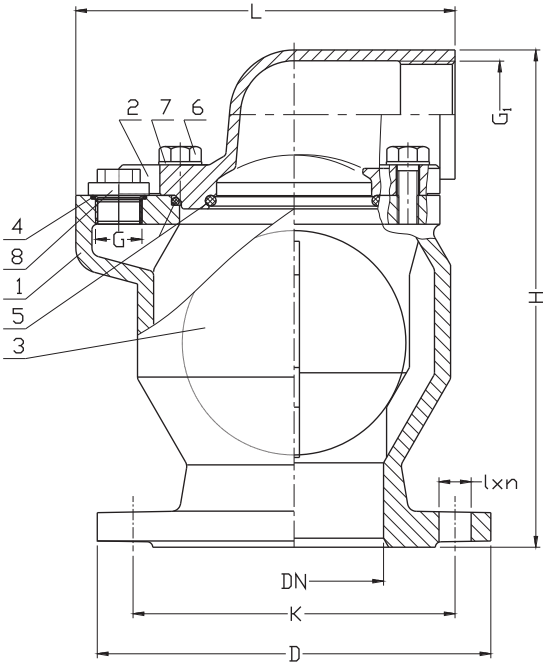

No.	Part	Standard execution
1	Body	Ductile cast iron EN-GJS-400-15 EN 1563
2	Bonnet	Ductile cast iron EN-GJS-400-15 EN 1563
3	Vulcanized ball	Aluminum AlSi EN 1706 Rubber NBR or EPDM EN-ISO 1629
4	Sealing ring	Rubber EPDM or NBR EN-ISO 1629
5	Sealing ring	Rubber EPDM or NBR EN-ISO 1629
6	Screws	Stainless steel EN ISO 4017
7	Washer	Stainless steel EN ISO 7091
8	Cork	Brass CW617N EN 12165

DN	H	L	D	K	l x n	G	G_1	Weight
[mm]						[cal]		[kg]
50 / GW 2"	187	156	165	125	19x4	3/4"	5/4"	7
80	242	195	200	160	19x8(4)*	3/4"	2"	14
100	319	195	220	180	19x8	3/4"	2"	18
150	350	265	285	240	23x8	3/4"	3"	33
200	350	270	340	295	23x8(12)*	3/4"	3"	34

We reserve the rights to modify the production program and the given data without separate notices due to the permanent company development

Air release valve
double orifice

PN10
PN16

SEWAGE

Relieve and areation valve with flange connection

Relieve and areation valve with threaded

Product description (standard execution):

- Patented self-cleaning sealing with automatic double stage air release nozzle
- Kinetic Single stage air release
- Hydraulic impact prevention
- Stainless steel release device
- Revision for flushing
- Floating switch made of polyethylene
- Bonnet deflector
- NBR sealing parts resistant against municipal sewage
- Body bonnet screws A2 made of stainless steel
- Body bonnet made of stainless steel 1.0037; EN 10025-2
- Epoxy coating minimum 250 microns according to EN 14901
- Product according to EN 1074-4
- Flange connection and connector according EN 1092-2(DIN2501) or threaded connection according to EN 10226-1 pressure PN10, PN16
- Minimum operating pressure equal to atmospheric pressure
- Threaded vent bonnet hole
- Product marking according to EN 19; EN 1074

Application:

Air release valve intended for use at sewage lines - for air release and aeration of the pipelines. Working conditions: temp. up +70°C

Test control:

Water pressure test according to EN 1074-1; EN 1074-2; EN 12266-1
Seat: 1,1 x PN
Body: 1,5 x PN

Installation:

Recommended to mount in vertical position in highest or inflection point of pipeline

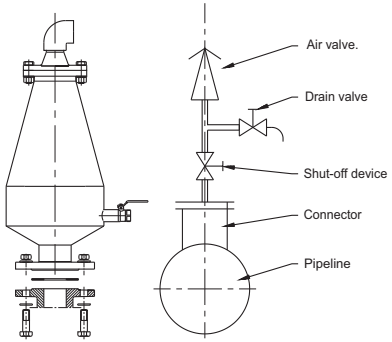

Flange connection

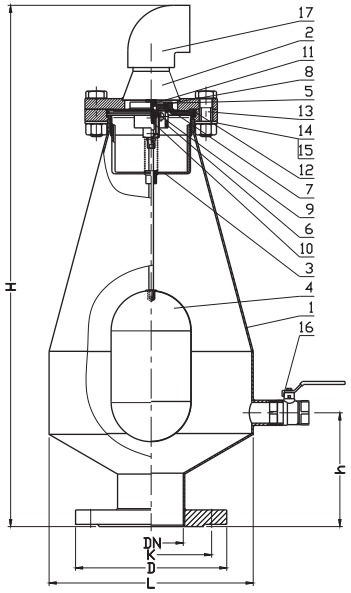

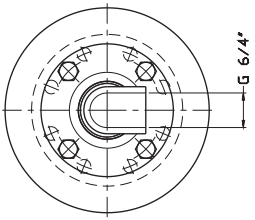

No.	Part	Standard execution
1	Complete body	Steel 1.0037 EN 10025-2
2	Bonnet	Steel 1.0037 EN 10025-2
3	Complete basket	Stainless steel 1.4301 EN 10088-1
4	Float	Polypropylene Stainless steel 1.4301 EN 10088-1
5	Seat	Stainless steel 1.4301 EN 10088-1
6	Basket	Stainless steel 1.4301 EN 10088-1
7	Valve head sealing	Rubber NBR EN ISO 1629
8	Roller	Stainless steel 1.4301 EN 10088-1
9	Sealing	Rubber NBR EN ISO 1629
10	Spring of valve	Stainless steel 1.4301 EN 10088-1
11	Sealing	Rubber NBR EN ISO 1629
12	Sealing ring	Rubber NBR EN ISO 1629
13	Screw	Stainless steel EN ISO 4017
14	Nut	Stainless steel EN ISO 4017
15	Washer	Stainless steel EN ISO 7091
16	Ball valve DN25 PN16	Producer catalog
17	Bend PCV 6/4"	Producer catalog

DN	H	h	L	D	K	Weight
[mm]						[kg]
50	690	150	270	165	125	16,0
80	690	150	270	200	160	17,0
100	690	150	270	220	180	18,0
150	690	150	270	285	240	21,0
200	690	150	270	340	295	23,0

Threaded connection

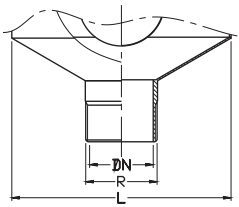

DN	H	h	L	R	Weight
[mm]					[kg]
50	690	150	270	2"	15,0
80	690	150	270	3"	16,0

We reserve the rights to modify the production program and the given data without separate notices due to the permanent company development

Air release valve
double orifice

PN10
PN16

SEWAGE

Relieve and areation valve

Product description (standard execution):

- Patented self-cleaning sealing with automatic double stage air release nozzle
- Kinetic Single stage air release
- Hydraulic impact prevention
- Stainless steel release device
- Revision for flushing
- Floating switch made of polyethylene
- Bonnet deflector
- NBR sealing parts resistant against municipal sewage
- All internal parts made of stainless steel 1.4301
- Body bonnet screws A2 made of stainless steel
- Body bonnet made of stainless steel 1.4301
- Product according to EN 1074-4
- Flange connection and connector according EN 1092-2(DIN2501) or threaded connection according to EN 10226-1 pressure PN10, PN16
- Minimum operating pressure equal to atmospheric pressure
- Threaded vent bonnet hole
- Product marking according to EN 19; EN 1074

Application:

Air release valve intended for use at sewage lines - for air release and aeration of the pipelines. Working conditions: temp. up +70°C

Test control:

Water pressure test according to EN 1074-1; EN 1074-2; EN 12266-1
Seat: 1,1 x PN
Body: 1,5 x PN

Execution variant:

Stainless steel 1.4401

Installation:

Recommended to mount in vertical position in highest or inflection point of pipeline

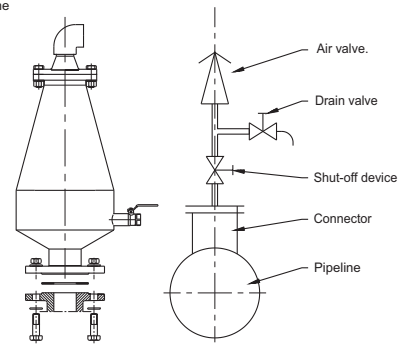

Flange connection

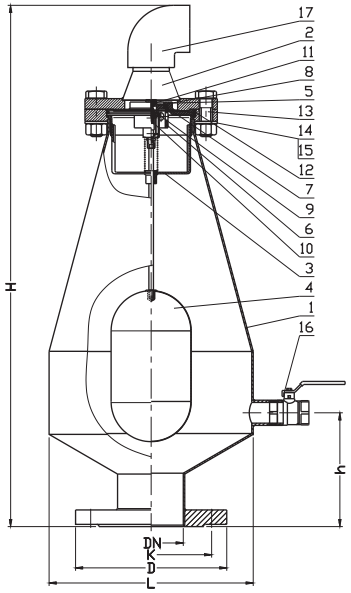

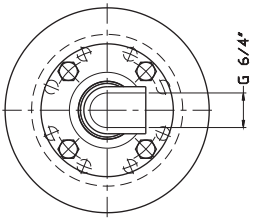

No.	Part	Standard execution
1	Complete body	Stainless steel 1.4301 EN 10088-1
2	Bonnet	Stainless steel 1.4301 EN 10088-1
3	Complete basket	Stainless steel 1.4301 EN 10088-1
4	Float	Poly propy lene Stainless steel 1.4301 EN 10088-1
5	Seat	Stainless steel 1.4301 EN 10088-1
6	Basket	Stainless steel 1.4301 EN 10088-1
7	Valv e head sealing	Rubber NBR EN ISO 1629
8	Roller	Stainless steel 1.4301 EN 10088-1
9	Sealing	Rubber NBR EN ISO 1629
10	Spring of v alv e	Stainless steel 1.4301 EN 10088-1
11	Sealing	Rubber NBR EN ISO 1629
12	Sealing ring	Rubber NBR EN ISO 1629
13	Screw	Stainless steel EN ISO 4017
14	Nut	Stainless steel EN ISO 4017
15	Washer	Stainless steel EN ISO 7091
16	Ball v alv e DN25 PN16	Producer catalog
17	Bend PCV 6/4"	Producer catalog

DN	H	h	L	D	K	Weight
[mm]						[kg]
50	690	150	270	165	125	16,0
80	690	150	270	200	160	17,0
100	690	150	270	220	180	18,0
150	690	150	270	285	240	21,0
200	690	150	270	340	295	23,0

Threaded connection

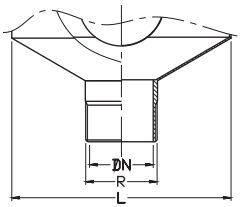

DN	H	h	L	R	Weight
[mm]					[kg]
50	690	150	270	2"	15,0
80	690	150	270	3"	16,0

We reserve the rights to modify the production program and the given data without separate notices due to the permanent company development

Air release valve
single and double orifice

PN10
PN16

WATER

7040
Single stage for potable water

7050
Double stage for potable water

Product description (standard execution):

7040
- Automatic air release in the whole pressure range
- Hydraulic impacts prevention
- Bonnet hole enables assembling of additional air valves
- Body bonnet made of pressed brass CW617N; EN 12165
- Floating switch made of polyethylene
- Stainless steel release device set 1.4301
- Product according to EN 1074-4
- Threaded connection according EN 10226-1 pressure PN10, PN16

7050
- Two types of valves enabling double stage assembly
- 7010 for single stage operation
- 7040 for double stage operation

Application:

Air release valve intended for use at water lines - for air release and aeration of the pipelines. Working conditions:
temp. up +70°C

Test control:

Water pressure test according to EN 1074-1; EN 1074-2; EN 12266-1
Seat: 1,1 x PN
Body: 1,5 x PN

Installation:

Recommended to mount in vertical position in highest or inflection point of pipeline

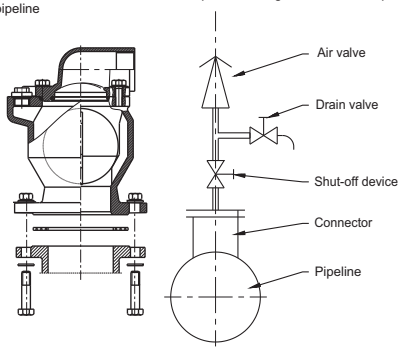

7040

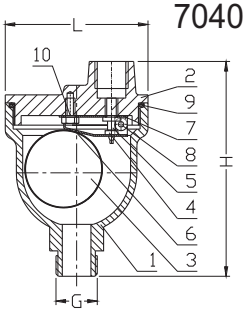

7050

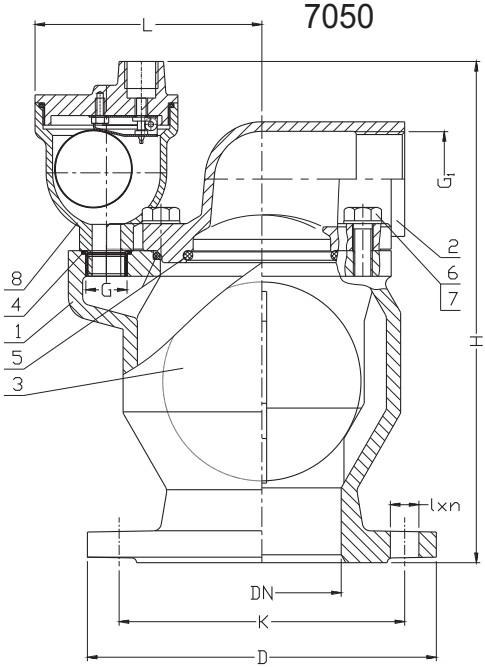

No.	Part	Standard execution
1	Body	Brass CW617N EN 12165
2	Bonnet	Brass CW617N EN 12165
3	Float	Polyethylene EN ISO 1872-1
4	Sealing	Rubber EPDM or NBR EN ISO 1629
5	Nozzle	Stainless steel 1.4301 EN 10088-1
6	Lower lever	Stainless steel 1.4021 EN 10088-1
7	Upper lever	Stainless steel 1.4021 EN 10088-1
8	Bolt	Stainless steel 1.4301 EN 10088-1
9	Sealing ring	Rubber EPDM or NBR EN ISO 1629
10	Screw	Stainless steel EN ISO 4017

No.	Part	Standard execution
1	Body	Ductile cast iron EN-GJS-400-15 EN 1563
2	Bonnet	Ductile cast iron EN-GJS-400-15 EN 1563
3	Vulcanized ball	Aluminum AlSi EN 1706 Rubber NBR or EPDM EN ISO 1629
4	Sealing ring	Rubber EPDM or NBR EN ISO 1629
5	Sealing ring	Rubber EPDM or NBR EN ISO 1629
6	Screws	Stainless steel EN ISO 4017
7	Washer	Stainless steel EN ISO 7091
8	Air valve 7040	Separate specification

Choose the size of the valve breather aeration					
Pipeline	DN	80-250	300-400	450-550	600-900
Double stage for potable water	DN	50	80	100	150

G	H	L	Weight
[cal]	[mm]		[kg]
3/4"	135	85	1,6
1"	135	85	1,7
5/4"	135	85	1,7
6/4"	135	85	1,8

DN	H	L	D	K	l x n	G	G_1	Weight
[mm]						[cal]		[kg]
50 / GW 2"	250	108	165	125	19x4	3/4"	5/4"	8,5
80	280	128	200	160	19x8(4)*	3/4"	2"	15,5
100	316	141	220	180	19x8	3/4"	2"	19,5
150	355	173	285	240	23x8	3/4"	3"	34,5
200	355	173	340	295	23x8(12)*	3/4"	3"	35,6

We reserve the rights to modify the production program and the given data without separate notices due to the permanent company development

Air release valve
double orifice

PN10
PN16

WATER

Product description (standard execution):

- Patented self-cleaning sealing of automatic double stage air release nozzle
- Kinetic single stage of air release
- Enables maintenance and removal/exchange of working parts on running pipeline
- Automatic full dehydration system - amount of water remaining = 0
- Hydraulic impacts prevention
- All internal parts made of stainless steel 1.4301
- Product according to EN 1074-4
- Flange connection according to EN 1092-2(DIN2501) or threaded connection according to EN 10226-1 pressure PN10, PN16
- Product marking according to EN 19; EN 1074

Application:

Air release valve intended for use at water lines - for air release and aeration of the pipelines. Working conditions: temp. up to +70°C

Test control:

Water pressure test according to EN 1074-1; EN 1074-2; EN 12266-1
Seat: 1,1 x PN
Body: 1,5 x PN

Installation:

Recommended to mount in vertical position in highest or inflection point of pipeline

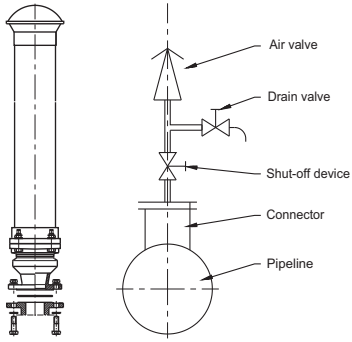

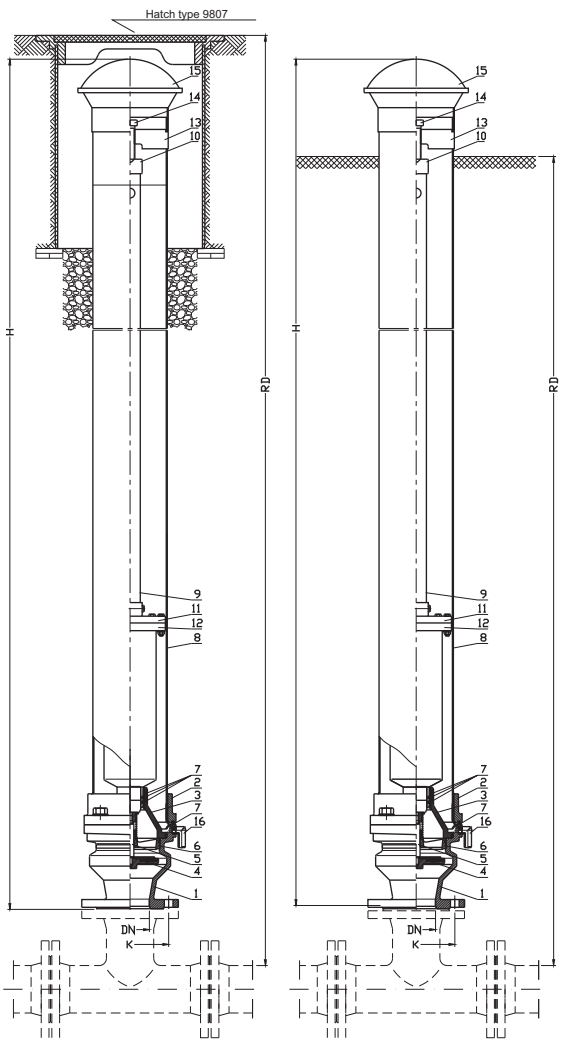

No.	Part	Standard execution
1	Body	Ductile cast iron EN-GJS-400-15 EN 1563
2	Flange	Ductile cast iron EN-GJS-400-15 EN 1563
3	Bushing	Ductile cast iron EN-GJS-400-15 EN 1563
4	Valve plug	Brass CW617N EN 12165 Rubber EPDM EN ISO1629
5	Pin	Stainless steel 1.4301 EN 10088-1
6	Fence	Brass CW617N EN 12165
7	Gasket ring	Rubber EPDM EN ISO 1629
8	Casing pipe	Stainless steel 1.4301 EN 10088-1
9	Pipe	Stainless steel 1.4301 EN 10088-1
10	Socket pipe	Stainless steel 1.4301 EN 10088-1
11	Flange	Stainless steel 1.4301 EN 10088-1
12	Air release valve for wastewater	Stainless steel EN 10088-1
13	Support	Ductile cast iron EN-GJS-400-15 EN 1563
14	Screw	Stainless steel 1.4301 EN 10088-1
15	Bonnet	Polietylene EN ISO1872-1
16	Dehydrator	Polipropylene EN ISO1872-1

DN	RD		H	K	Weight
	Installation of underground	Installation above ground			
[mm]					[kg]
50	1250	1000	1095	125	29,5
50	1500	1250	1345	125	32,0
50	1750	1500	1595	125	34,0
50	2000	1750	1845	125	36,0
50	2250	2000	2095	125	38,0
80	1250	1000	1095	160	33,0
80	1500	1250	1345	160	35,5
80	1750	1500	1595	160	38,2
80	2000	1750	1845	160	41,2
80	2250	2000	2095	160	44,0
100	1250	1000	1095	180	-
100	1500	1250	1345	180	-
100	1750	1500	1595	180	-
100	2000	1750	1845	180	-
100	2250	2000	2095	180	-

We reserve the rights to modify the production program and the given data without separate notices due to the permanent company development

Air release valve double orifice
with plastic chamber

PN10
PN16

SEWAGE

Typ 7092

Product description (standard execution):

- Patented self-cleaning sealing of automatic double stage air release nozzle
- Kinetic Single stage of air release
- Hydraulic impacts prevention
- Easy and fast disassembling from the installation by quick release coupling
- Shut-off device cut the flow during service work
- Revision for flushing during service work
- Bonnet deflector
- Placed in plastic chamber with cover
- Chamber drainage
- All internal parts of air release valve and shut-off device made of stainless steel 1.4301
- Body bonnet made of stainless steel 1.0037; EN 10025-2 protected against corrosion
- Epoxy coating minimum 250 microns according to EN 14901
- Floating switch made of polyethylene
- Body bonnet screws made of stainless steel A2
- Product according to EN 1074-4
- Flange connection and connector according EN 1092-2(DIN2501) or threaded according EN 10226-1 pressure PN10, PN16
- Threaded vent bonnet hole
- Product marking according to EN 19; EN 1074

Application:

Air release valve intended for use at sewage lines - for air release and aeration of the pipelines. Working conditions: temp. up +70°C

Test control:

Water pressure test according to EN 1074-1; EN 1074-2; EN 12266-1
Seat: 1,1 x PN
Body: 1,5 x PN

Accessories:

Adapter set - see: 7092

Execution variant:

Stainless steel 1.4301

Installation:

Recommended to mount in vertical position in highest or inflection point of pipeline

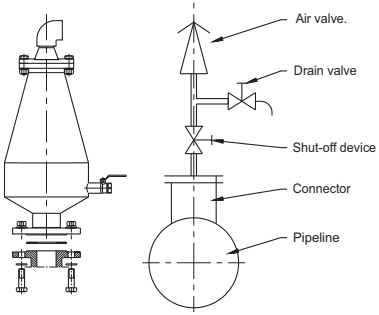

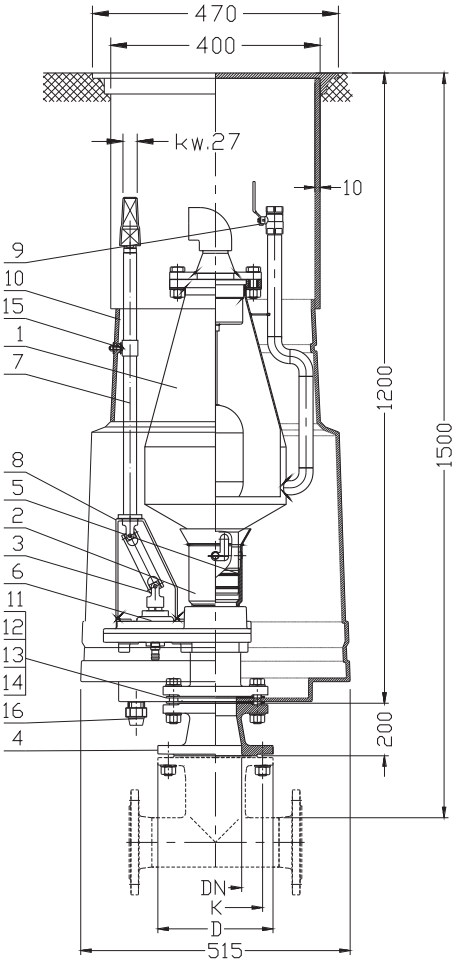

Flushing cleaning set type 7091

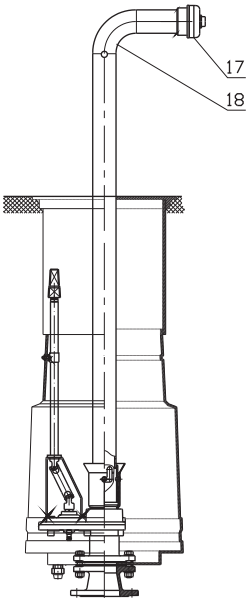

No.	Part	Standard execution
1	Valve 7020 7025	Steel 1.0037; EN 10025-2 Stainless steel 1.4301; EN 10088-1
2	Quick connector	Steel 1.0037; EN 10025-2 Stainless steel 1.4301; EN 10088-1
3	Coupling	Stainless steel 1.4301 EN 10088-1
4	Double flanged concentric taper FFR	Producer catalogue
5	O-ring	Rubber NBR EN ISO 1629
6	Valve plate	Producer catalogue
7	Rigid extension spindle	Stainless steel 1.4301 EN 10088-1
8	Support coupling	Steel S235JR EN 10025-2
9	Ball valve 1"	Producer catalogue
10	Well	PEHD EN ISO 17855-1
11	Screw	Stainless steel A2 EN ISO 4017
12	Nut	Stainless steel A4 EN ISO 4032
13	Washer	Stainless steel A2 EN ISO 7091
14	Gasket flange	Rubber NBR EN ISO 1629
15	Handle	Stainless steel 1.4301 EN 10088-1
16	Connector ř 32	Producer catalogue
17	Socket B75	Aluminum AlSi EN 1706
18	Cleaning and cleaning kit adapter 7092	Stainless steel 1.4301 EN 10088-1

DN	K	D	Weight
[mm]			[kg]
50	125	165	60
65	145	186	61
80	160	200	63
100	180	220	65
150	240	285	70

We reserve the rights to modify the production program and the given data without separate notices due to the permanent company development

Strainer
flanged

PN10
PN16

WATER

In the picture 7110 DN50

In the picture 7110 DN200

Product description (standard execution):

- Body-bonnet gasket EPDM, Graphite
- Drain plug made of ductile cast iron, stainless steel
- Strainer made of stainless steel 1.4301 about a sieve size: 1,00 [mm] for DN50
  1,25 [mm] for DN65- DN80
  1,60 [mm] for DN100 - DN300 :
- Body and bonnet made of ductile: cast iron EN-GJS 400-15 EN1563 for DN50 to Dn100 and DN150;
  gray iron EN-GJL 250 EN 1561 for DN125 and DN200 to DN300;
- Body-bonnet Zinc coated screws or stainless steel screws
- Flange connection according EN 1092-2(DIN2501) or pressure PN10, PN16
- Face to face according to EN 558 row 1
- Epoxy coating minimum 250 microns according to EN 14901
- Product marking according to EN 19; EN 1074

Application:

Water lines catchand separate particules with diameter bigger then 1,00[mm].
Operating temp. up 120°C (70°C for EPDM)

Installation:

In horizontal position

Test control:

Water pressure test according to EN 1074-1; EN 1074-2; EN 12266-1
Body: 1,5 x PN

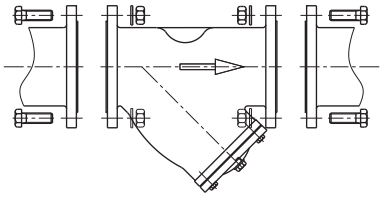

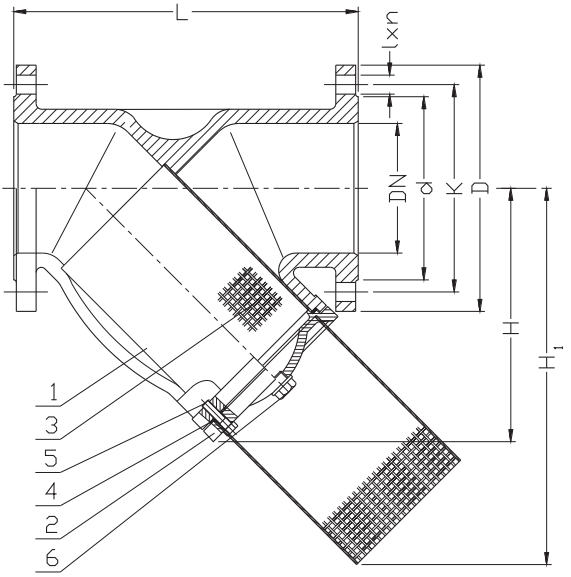

No.	Part	Standard execution
1	Body	Gray cast iron EN-GJL-250 EN 1561, Ductile cast iron EN-GJS 40-15 EN1563
2	Bonnet	Gray cast iron EN-GJL-250 EN 1561, Ductile cast iron EN-GJS 40-15 EN1563
3	Strainer screen	Stainless steel 1.4301 EN 10088-1
4	Sealing	Graphite CrNiSt, EPDM
5	Screw	Stainless steel EN ISO 4016
6	Drain plug	Ductile cast iron cast iron EN-GJMB-300-6 EN 1562, Stainless steel

DN	PN	L	H	H_1	D	d	K	l x n	Plug	Weight
[mm]	[MPa]	[mm]							[cal]	[kg]
50	1,0 -1,6	230	130	195	165	102	125	19x4	1/2"	7,5
65	1,0 -1,6	290	160	240	185	122	145	19x4	1"	11,5
80	1,0 -1,6	310	183	270	200	138	160	19x4/(8)	1"	13
100	1,0 -1,6	350	212	310	220	158	180	19x8	1"	18,5
125	1,0 -1,6	400	280	390	250	188	210	19x8	5/4"	33
150	1,0 -1,6	480	293	417	285	212	240	23x8	6/4"	42
200	1,0 -1,6	600	360	625	340	268	295	23x8(12)	6/4"	75
250	1,0 -1,6	730	460	720	395	320	350/355	23(28)x12	2"	122
300	1,0 -1,6	850	520	820	445	370	400/410	23(28)x12	2"	178

We reserve the rights to modify the production program and the given data without separate notices due to the permanent company development

Public water fountain

PN16

WATER

Product description (standard execution):

- Body made of ductile cast iron
- Closing valve parts made of brass
- Complete drainage after cut-off the flow
- Tap pipe zinc coated
- Resistant against disinfectants (suggested solution NaOCl)
- Epoxy coating minimum 250 microns according to EN 14901
- Working pressure PN16
- Threaded connector ¾" according to EN 10226-1
- Product marking according to EN 19; EN 1074

Application:

Water distribution in public and private areas

Test control:

Water pressure test according to EN 1074-1; EN 1074-2; EN 12266-1
Seat: 1,1 x PN
Body: 1,5 x PN

Accessories:

Hydrant drainage cover - see: 8860

Execution variant:

Tap pipe made of stainless steel 1.4301

Installation:

In vertical position on horizontal pipelines

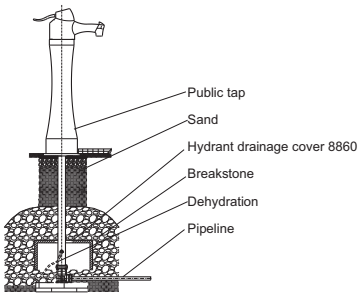

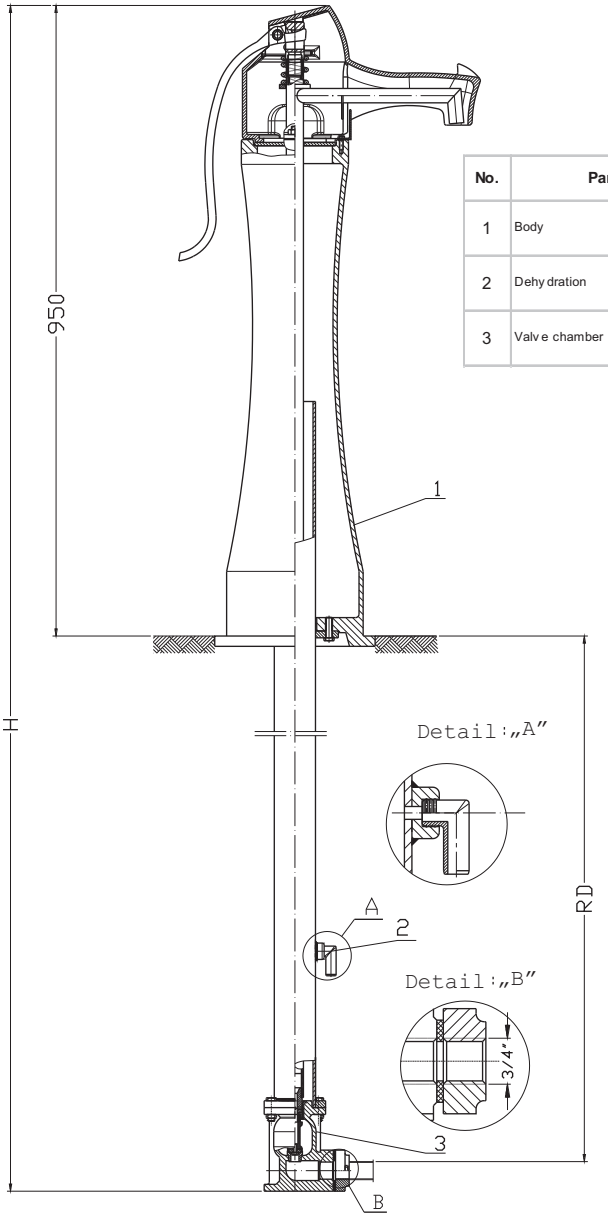

No.	Part	Standard execution
1	Body	Ductile cast iron EN-GJS-400-15; EN 1563
2	Dehydration	Polipropylene PP EN ISO 1873-1
3	Valve chamber	Grey iron EN-GJL-250; EN 1561

DN	RD	H*
[cal]	[mm]	
3/4"	1000	2000
	1250	2250
	1500	2500
	1800	2800

* - other lengths on request

Befor assembling please cut out the hole in the gasket 3 and install drain hose on the drainage outlet 2.

We reserve the rights to modify the production program and the given data without separate notices due to the permanent company development

Underground hydrant
with plate valve

PN10

WATER

Product description (standard execution):

- Construction prevents freezing – hydrant can be use in winter conditions / frost zones
- Dehydrator in the bottom part of hydrant. Water drainage from the stand to the ground after each use cycle
- Complete drainage after cut-off the
- Locking and closing elements made of brass
- Resistant against disinfectants (suggested solution NaOCl)
- Epoxy coating to EN 14901
- Working pressure PN10
- Face to face according to Jafar documentation
- Threaded connection according to EN ISO 10226-1
- Jaw connection DN25 or DN52 according to DIN 14317
- Product marking according to EN 19; EN 1074

Application:

In plumbing installations in home gardens, plots or in systems enabling water withdrawal in the winter, for example for snowing ski slopes and running routes, and wherever access to water is required in locations away from the property. Yard hydrant is not designed for firefighting system. Medium temperature up to 70º C

Test control:

Water pressure test according to EN 1074-1; EN 1074-2; EN 12266-1
Seat: 1,1 xPN
Body: 1,5 x PN

Accessories:

The hydrant key- see: 8014
The hydrant outlet extension - see: 8015
Street box - see: 9502-PEHD-GJL

Execution variant:

Column made of stainless steel 1.4301

Installation:

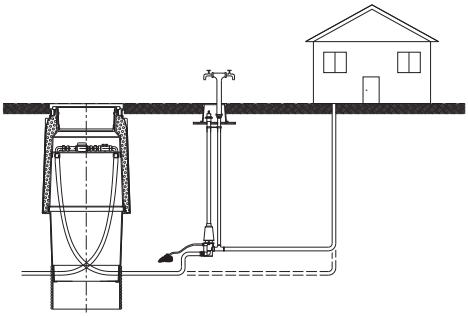

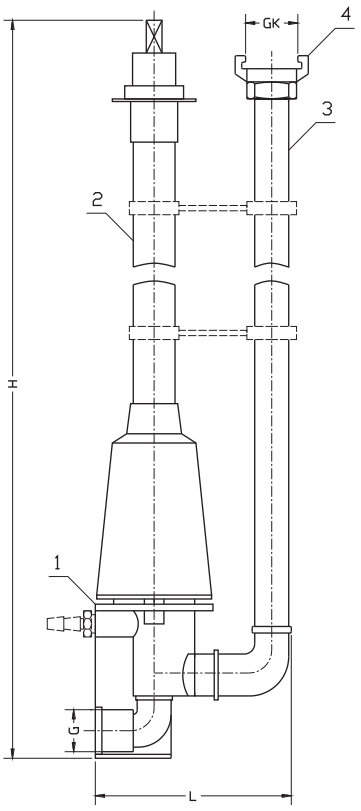

Built options:

Street box PEHD
- see: 9501H

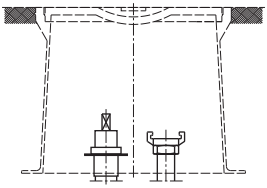

Additional accessories:

The hydrant key
8014

The hydrant outlet
extension stand
8015

DN	G	GK	H	L
[mm]	[cal]		[mm]	
25	1"	1"	1280	170
50	6/4"	2"	1280	170

No.	Part	Standard execution
1	Close valve with dehydrator	Ductile cast iron EN-GJS-400-15 EN 1563
	Vulcanized wedge - elastomer	Grey iron; ductile cast iron EN-GJL-250; EN 1561 EN-GJS-400-15; EN 1563 rubber EPDM EN ISO 1629
	Stem	Stainless steel 1.4021 EN 10088-1
2	Rigid extension spindle for connectors	Steel 1.0037 EN 10025-2 Polietylene PE EN ISO 1872-1
3	Stand	Steel 65G
4	Bayonet socket	Brass CW617N EN 12165 Aluminum EN 1706

We reserve the rights to modify the production program and the given data without separate notices due to the permanent company development

Pillar type fire hydrant
double closing

PN16

FIRE PREVENTION

- **BREAKAGE PROTECTED**
- **MONOLITHIC HEAD WITH OUTLET CONNECTORS**
- **ROTATING HEAD 0° TO 360°**

VERSION

8003.4 DN80

Product description (standard execution):

- Complete drainage after full cut - off the flow
- Kv factor > 80 [m³/h] - (for 1x75 [mm]); Kv factor > 140 [m³/h] - (for 2x75 [mm]);
- Dehydration time < 15 [min.]
- Water-traces < 100 ml (for DN80)
- Replaceable head - without closing the valve
- Stainless steel stem with rolled thread
- O-ring stem sealing, packing cork protected against medium
- Forged packing cork protected against unscrewing
- EPDM fully vulcanized valve plug
- Welded brass socket constituting a monolithic body with the bottom body, resistant to scratches and surface damage
- Coat of arms place
- Initial opening < 3 turns; full opening after 8 turns
- MOT 80 Nm
- MST 250 Nm
- Corrosion resistant internal and external parts
- Stand pipe made of ductile cast iron pipe (coated with zinc)
- UV resistant epoxy coating minimum 250 microns according to EN 14901
- Resistant against disinfectants (suggested solution NaOCl)
- Flange connection and connector according EN 1092-2 (DIN 2501) pressure PN10; PN16
- Outlet connector 2xB 75 [mm] according to DIN 14318
- Control key according to PN-89/M – 74088
- Working pressure PN16
- Product according to EN 1074-1; EN 1074-6; EN 14384 TYPE C
- Product marking according to EN 19; EN 1074

Application:

Potable water lines; fire prevention systems temperature range to +50˚C

Test control:

Water pressure test according to EN 1074-1; EN 1074-2; EN 12266-1
Seat: 1,1 xPN
Body: 1,5 x PN
Operation torque test

Accessories:

Hydrant drainage cover - see: 8860

Execution variant:

Self-leveling version
Tap pipe made of stainless steel 1.4301

Installation:

In vertical position on horizontal pipelines

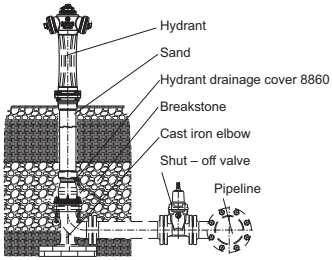

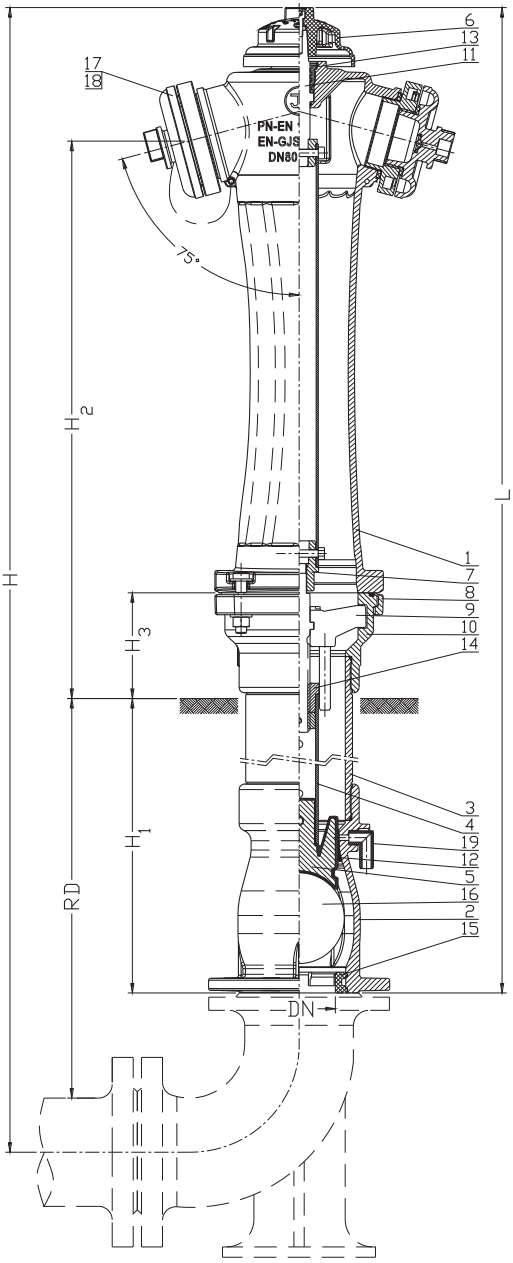

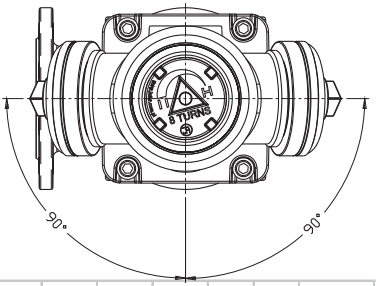

DN	RD	L	H	H_1	H_2	H_3	Weight
			[mm]				[kg]
80	1000	1640	1805	880	600	110	69
80	1250	1890	2055	1130	600	110	75
80	1500	2140	2305	1380	600	110	81
80	1800	2440	2605	1680	600	110	89

No.	Part	Standard execution
1	Head	Ductile cast iron EN-GJS 400-15; EN-GJS 500-7; EN 1563
2	Ball chamber	Ductile cast iron EN-GJS 400-15; EN-GJS 500-7; EN 1563
3	Stand pipe	Ductile cast iron EN-GJS 400-15; EN-GJS 500-7; EN1563 Steel 1.0037, EN 10025-2 Stainless steel 1.4301, EN 10088-1 EN 1503-1
4	Spindle	Stainless steel 1.4301 EN 10088-1
5	Valve plug	Ductile cast iron EN-GJS 400-15 / EPDM; EN 1563 / ISO 1629
6	Cap	Aluminium AlSi EN 1706
7	Coupling	Ductile cast iron EN-GJS 400-15; EN-GJS 500-7; EN 1563
8	Rotary flange pressure	Ductile cast iron EN-GJS 400-15; EN-GJS 500-7; EN 1563
9	Bracket	BrassCW617N EN 12165
10	Rotary flange	Ductile cast iron EN-GJS 400-15; EN-GJS 500-7; EN 1563
11	Stem	Stainless steel 1.4021 EN 10088-1
12	Socket	Bronze CuAl7 EN-ISO 24373
13	Gland seal	BrassCW617N EN 12165
14	Stem nut	BrassCW617N EN 12165
15	Ball blockade	Polyethylenen PP EN ISO 1873-1
16	Ball	Polipropylene or aluminium AlSi /rubber EPDM EN 1706 / EN ISO 1629
17	Outlet connector B	Aluminium AlSi EN 1706
18	Outlet connector cover	Aluminium AlSi EN 1706
19	Dehydrator	Polipropylene PP EN ISO 1873-1

We reserve the rights to modify the production program and the given data without separate notices due to the permanent company development

Pillar type fire hydrant
double closing

PN16

FIRE PREVENTION

- **BREAKAGE PROTECTED**
- **MONOLITHIC HEAD WITH OUTLET CONNECTORS**
- **ROTATING HEAD 0° TO 360°**

Product description (standard execution):

• Complete drainage after full cut - off the flow
• Kv factor > 80m³/h - (for 1x75); Kv factor > 140m³/h - (for 2x75); Kv factor > 160m³/h - (for 1x110);
• Dehydration time < 15 min.
• Water-traces < 150 ml (for DN100)
• Replaceable head - without closing the valve
• Stainless steel stem with rolled thread
• O-ring stem sealing, packing cork protected against medium
• Forged packing cork protected against unscrewing
• EPDM fully vulcanized valve plug
• Coat of arms place
• Initial opening < 3 turns; full opening after 8 turns
• MOT 80 Nm
• MST 250 Nm
• Corrosion resistant internal and external parts
• Stand pipe made of ductile cast iron pipe (coated with zinc)
• UV resistant epoxy coating minimum 250 microns according to EN 14901
• Resistant against disinfectants (suggested solution NaOCl)
• Flange connection and connector according EN 1092-2 (DIN 2501) pressure PN10; PN16
• Outlet connector B 75 according to DIN 14318
• Outlet connector A 110 according to DIN 14319
• Control key according to PN-89/M – 74088
• Working pressure PN16
• Product according to EN 1074-1; EN 1074-6; EN 14384 TYPE C
• Product marking according to EN 19; EN 1074

Application:

Potable water lines; fire prevention systems temperature range to +50˚C

Test control:

Water pressure test according to EN 1074-1; EN 1074-2; EN 12266-1
Seat: 1,1 x PN
Body: 1,5 x PN
Operation torque test

Accessories:

Hydrant drainage cover - see: 8860

Execution variant:

Self-leveling version
Tap pipe made of stainless steel 1.4301

Installation:

In vertical position on horizontal pipelines

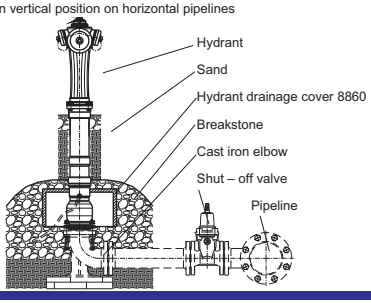

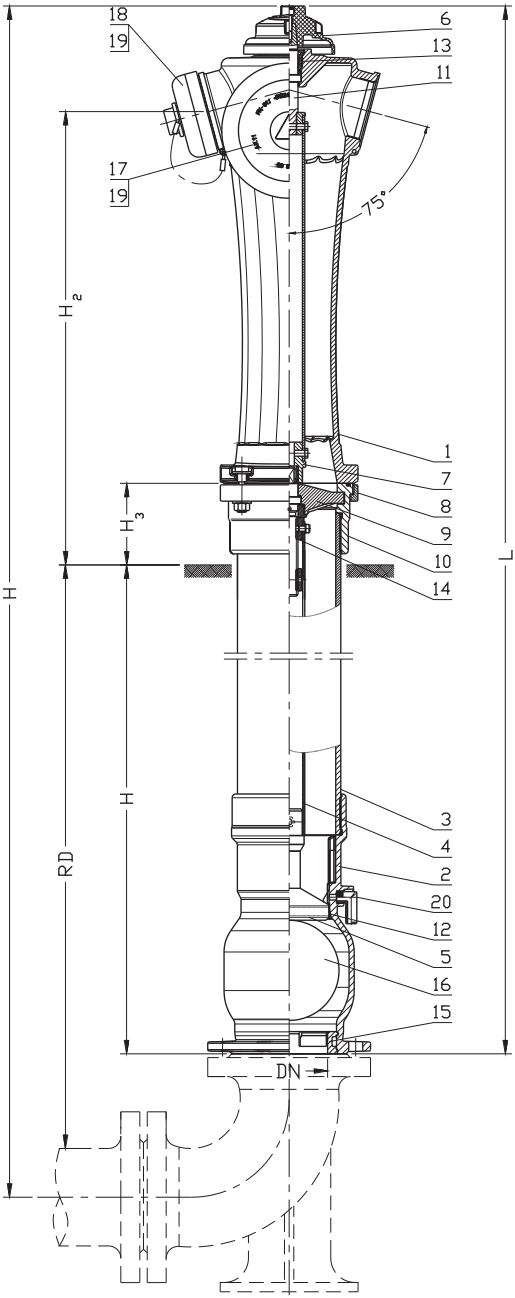

DN	RD	L	H	H_1	H_2	H_3	Weight
[mm]							[kg]
100	1000	1640	1825	875	600	110	58
100	1250	1890	2075	1125	600	110	63
100	1500	2140	2325	1375	600	110	68
100	1800	2440	2625	1675	600	110	74

No.	Part	Standard execution
1	Head	Ductile cast iron EN-GJS 400-15; EN-GJS 500-7; EN 1563
2	Ball chamber	Ductile cast iron EN-GJS 400-15; EN-GJS 500-7; EN 1563
3	Stand pipe	(Steel 1.0254; Stainless steel 1.4301) Ductile cast iron EN-GJS 400-15; EN-GJS 500-7; EN 1503-1
4	Spindle	Stainless steel 1.4301 EN 10088-1
5	Valve plug	Ductile cast iron EN-GJS 400-15 / EPDM; EN 1563 / EN ISO 1629
6	Cap	Aluminium AlSi EN 1706
7	Coupling	Stainless steel 1.4301 EN 10088-1
8	Rotary flange pressure	Ductile cast iron EN-GJS 400-15; EN-GJS 500-7; EN 1563
9	Bracket	Ductile cast iron EN-GJS 400-15; EN-GJS 500-7; EN 1563
10	Rotary flange	Ductile cast iron EN-GJS 400-15; EN-GJS 500-7; EN 1563
11	Stem	Stainless steel 1.4021 EN 10088-1
12	Socket	Bronze CuAl7 EN-ISO 24373
13	Gland seal	Brass CW617N EN 12165
14	Stem nut	Brass CW617N EN 12165
15	Ball blockade	Polyethylenen PE EN ISO 1873-1
16	Ball	Polipropylene or aluminium AlSi / rubber EPDM EN 1706 / EN ISO 1629
17	Outlet connector A	Aluminium AlSi EN 1706
18	Outlet connector B	Aluminium AlSi EN 1706
19	Outlet connector cover	Aluminium AlSi EN 1706
20	Dehydrator	Polipropylene PP EN ISO 1873-1

We reserve the rights to modify the production program and the given data without separate notices due to the permanent company development

Pillar type fire hydrant
single closing

PN16

FIRE PREVENTION

- **BREAKAGE PROTECTED**
- **ROTATING HEAD 0° TO 360°**

Product description (standard execution):

- Complete drainage after full cut - off the flow
- Kv factor > 80m³/h - (for 1x75); Kv factor > 140m³/h - (for 2x75); Kv factor > 160m³/h - (for 1x110);
- Dehydration time < 15 min.
- Water-traces < 100 ml (for DN80)
- Water-traces < 150 ml (for DN100)
- Stainless steel stem with rolled thread
- O-ring stem sealing, packing cork protected against medium
- Forged packing cork protected against unscrewing
- EPDM fully vulcanized valve plug
- Coat of arms place
- Initial opening < 3 turns; full opening after 8 turns
- MOT 80 Nm
- MST 250 Nm
- Corrosion resistant internal and external parts
- Stand pipe made of ductile cast iron pipe (coated with zinc)
- UV resistant epoxy coating minimum 250 microns according to EN 14901, GSK RAL certificate
- Resistant against disinfectants (suggested solution NaOCl)
- Flange connection and connector according EN 1092-2 (DIN 2501) pressure PN10; PN16
- Outlet connector B 75 according to DIN 14318
- Outlet connector A 110 according to DIN 14319
- Control key according to PN-89/M – 74088
- Working pressure PN16
- Product according to EN 1074-1; EN 1074-6; EN 14384 TYPE C
- Product marking according to EN 19; EN 1074

Application:

Potable water lines; fire prevention systems temperature range to +50˚C

Test control:

Water pressure test according to EN 1074-1; EN 1074-2; EN 12266-1
Seat: 1,1 x PN
Body: 1,5 x PN
Operation torque test

Accessories:

Hydrant drainage cover - see: 8860

Execution variant:

Self-leveling version
Tap pipe made of stainless steel 1.4301

Installation:

In vertical position on horizontal pipelines

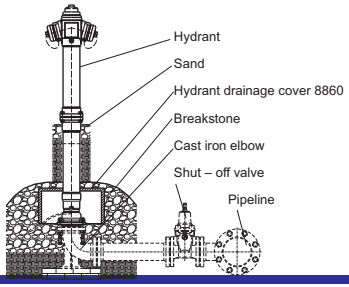

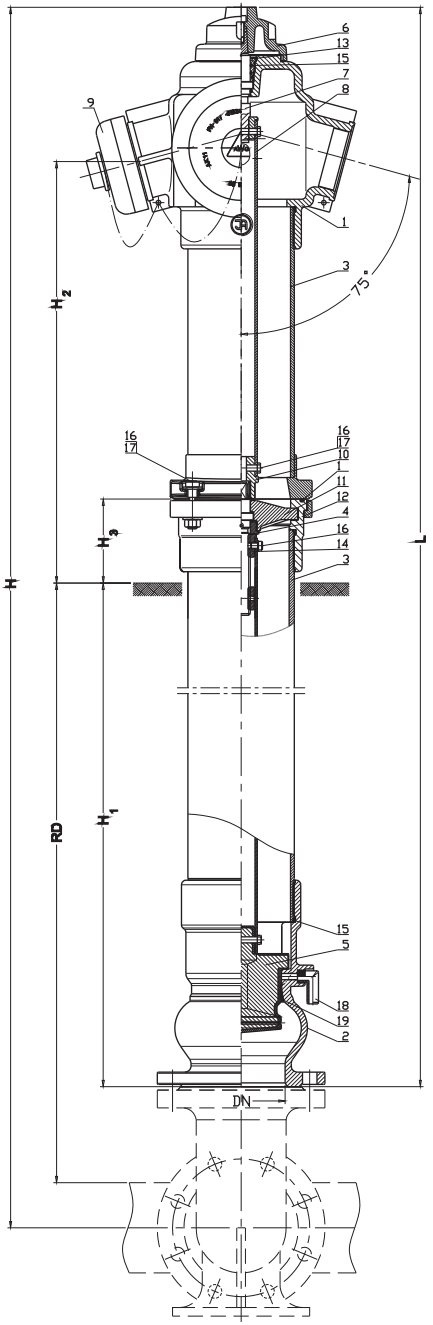

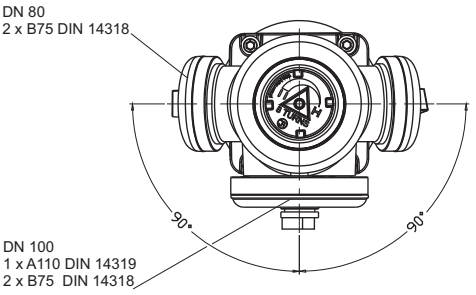

DN	RD	L	H	H_1	H_2	H_3	Weight
			[mm]				[kg]
80	1000	1640	1805	880	600	110	43
80	1250	1890	2055	1130	600	110	46
80	1500	2140	2305	1380	600	110	49
80	1800	2440	2605	1680	600	110	54
100	1000	1640	1825	875	600	110	57
100	1250	1890	2075	1125	600	110	62
100	1500	2140	2325	1375	600	110	67
100	1800	2440	2625	1675	600	110	73

No.	Part	Standard execution
1	Head	Ductile cast iron EN-GJS-400-15; EN 1563
2	Bottom body	Ductile cast iron EN-GJS-400-15; EN 1563
3	Stand pipe	Stainless steel 1.4301 EN 10088-1
4	Sleeve	Brass CW617N EN 12165
5	Valve plug	Ductile cast iron EN-GJS-400-15; /EPDM; EN 1563 / EN ISO 1629
6	Cap	Aluminium AlSi EN 1706
7	Stem	Stainless steel 1.4021 EN 10088-1
8	Spindle	Stainless steel 1.4301 EN 10088-1
9	Outlet connector	Aluminium AlSi EN 1706
10	Coupling	Stainless steel 1.4301 EN 10088-1
11	Mounted stem	Ductile cast iron EN-GJS-400-15; EN 1563
12	Bottom flange	Ductile cast iron EN-GJS-400-15; EN 1563
13	Gland seal	Brass CW617N EN 12165
14	Stem nut	Brass CW617N EN 12165
15	O – ring gasket	Rubber EPDM EN ISO 1629
16	Screw	Stainless steel A2 EN ISO 4017; EN ISO 4762
17	Nut	Stainless steel A4 EN ISO 4032
18	Dehydrator	Polipropylene PP EN ISO 1873-1
19	Socket	Bronze CuAl7 EN ISO 24373

We reserve the rights to modify the production program and the given data without separate notices due to the permanent company development

Pillar type fire hydrant
single closing

PN16

FIRE PREVENTION

- BREAKAGE PROTECTED
- MONOLITHIC HEAD WITH OUTLET CONNECTORS
- ROTATING HEAD 0° TO 360°

Product description (standard execution):

• Complete drainage after full cut - off the flow
• Kv factor > 80m³/h - (for 1x75); Kv factor > 140m³/h - (for 2x75); Kv factor > 160m³/h - (for 1x110);
• Dehydration time < 15 min.
• Water-traces < 150 ml (for DN100)
• Stainless steel stem with rolled thread
• O-ring stem sealing, packing cork protected against medium
• Forged packing cork protected against unscrewing
• EPDM fully vulcanized valve plug
• Coat of arms place
• Initial opening < 3 turns; full opening after 8 turns
• MOT 80 Nm
• MST 250 Nm
• Corrosion resistant internal and external parts
• Stand pipe made of ductile cast iron pipe (coated with zinc)
• UV resistant epoxy coating minimum 250 microns according to EN 14901
• Resistant against disinfectants (suggested solution NaOCl)
• Flange connection and connector according EN 1092-2 (DIN 2501) pressure PN10; PN16
• Outlet connector B 75 according to DIN 14318
• Outlet connector A 110 according to DIN 14319
• Control key according to 89/M – 74088
• Working pressure PN16
• Product according to EN 1074-1; EN 1074-6; EN 14384 TYPE C
• Product marking according to EN 19; EN 1074

Application:

Potable water lines; fire prevention systems temperature range to +50˚C

Test control:

Water pressure test according to EN 1074-1; EN 1074-2; EN 12266-1
Seat: 1,1 x PN
Body: 1,5 x PN
Operation torque test

Accessories:

Hydrant drainage cover - see: 8860

Execution variant:

Self-leveling version
Tap pipe made of stainless steel 1.4301

Installation:

In vertical position on horizontal pipelines

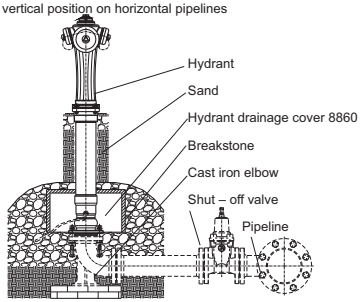

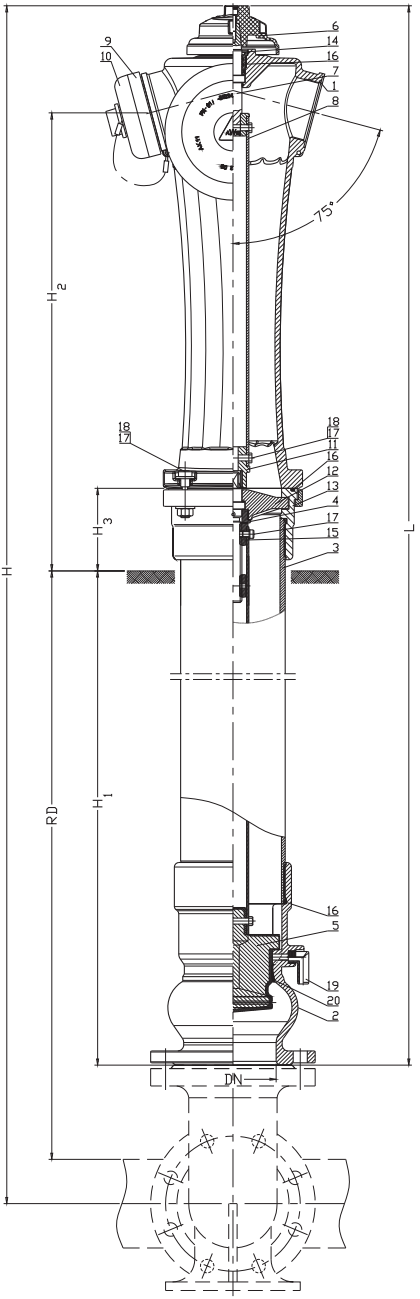

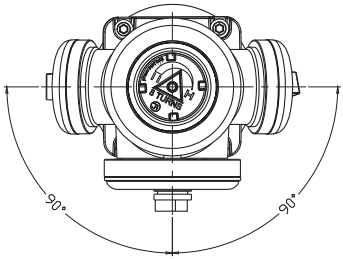

DN	RD	L	H	H_1	H_2	H_3	Weight
			[mm]				[kg]
100	1000	1640	1825	875	600	110	57
100	1250	1890	2075	1125	600	110	62
100	1500	2140	2325	1375	600	110	67
100	1800	2440	2625	1675	600	110	73

No.	Part	Standard execution
1	Head	Ductile cast iron EN-GJS-400-15; EN 1563
2	Bottom body	Ductile cast iron EN-GJS-400-15; EN 1563
3	Stand pipe	Steel 1.0254; Stainless steel 1.4301 EN 1503-3
4	Sleeve	Brass CW617N EN 12165
5	Valve plug	Ductile cast iron EN-GJS-400-15: EPDM; EN 1563 / EN ISO 1629
6	Cap	Aluminium AlSi EN 1706
7	Stem	Stainless steel 1.4021 EN 10088-1
8	Spindle	Stainless steel 1.4301 EN 10088-1
9	Outlet connector	Aluminium AlSi EN 1706
10	Bonnet	Aluminium AlSi; EN 1706 Ductile cast iron EN-GJS-400-15; EN
11	Coupling	Ductile cast iron EN-GJS-400-15; EN 1563
12	Mounted stem	Ductile cast iron EN-GJS-400-15; EN 1563
13	Bottom flange	Ductile cast iron EN-GJS-400-15; EN 1563
14	Gland seal	Brass CW617N EN 12165
15	Stem nut	Brass CW617N EN 12165
16	O – ring gasket	Rubber EPDM EN ISO 1629
17	Screw	Stainless steel A2 EN ISO 4017; EN ISO 4762
18	Nut	Stainless steel A4 EN ISO 4032
19	Dehydrator	Polipropylene PP EN ISO 1873-1
20	Socket	Bronze CuAl7 EN ISO 24373

We reserve the rights to modify the production program and the given data without separate notices due to the permanent company development

Pillar type fire hydrant
single closing

PN16

FIRE PREVENTION

- BREAKAGE PROTECTED
- MONOLITHIC HEAD WITH OUTLET CONNECTORS
- ROTATING HEAD 0° TO 360°

Product description (standard execution):

• Complete drainage after full cut - off the flow
• Kv factor > 80m³/h - (for 1x75); Kv factor > 140m³/h - (for 2x75);
• Dehydration time < 15 min.
• Water-traces < 100 ml (for DN80)
• Stainless steel stem with rolled thread
• O-ring stem sealing, packing cork protected against medium
• Forged packing cork protected against unscrewing
• EPDM fully vulcanized valve plug
• Coat of arms place
• Initial opening < 3 turns; full opening after 8 turns
• MOT 80 Nm
• MST 250 Nm
• Corrosion resistant internal and external parts
• Stand pipe made of ductile cast iron pipe (coated with zinc)
• UV resistant epoxy coating minimum 250 microns according to EN 14901
• Resistant against disinfectants (suggested solution NaOCl)
• Flange connection and connector according EN 1092-2 (DIN 2501) pressure PN10; PN16
• Outlet connector B 75 according to DIN 14318
• Control key according to 89/M – 74088
• Working pressure PN16
• Product according to EN 1074-1; EN 1074-6 ; EN 14384 TYPE C
• Product marking according to EN 19; EN 1074

Application:

Potable water lines; fire prevention systems temperature range to +50˚C

Test control:

Water pressure test according to EN 1074-1; EN 1074-2; EN 12266-1
Seat: 1,1 x PN
Body: 1,5 x PN
Operation torque test

Accessories:

Hydrant drainage cover - see: 8860

Execution variant:

Self-leveling version
Tap pipe made of stainless steel 1.4301

Installation:

In vertical position on horizontal pipelines

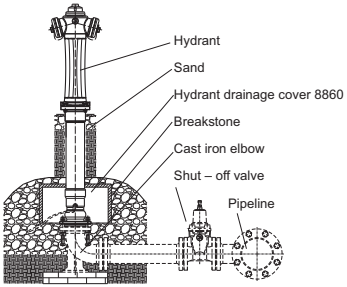

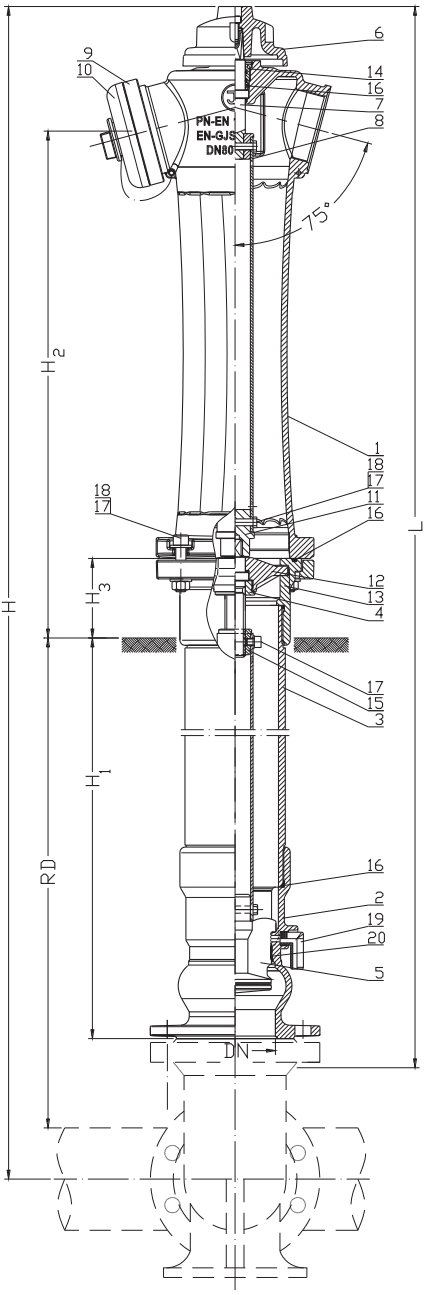

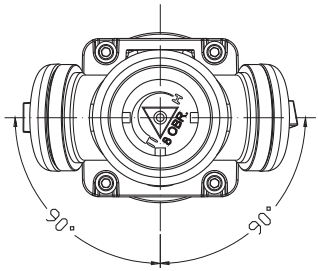

DN	RD	L	H	H_1	H_2	H_3	Weight
[mm]							[kg]
80	1000	1640	1805	880	600	110	48
80	1250	1890	2055	1130	600	110	53
80	1500	2140	2305	1380	600	110	58
80	1800	2440	2605	1680	600	110	64

No.	Part	Standard execution
1	Head	Ductile cast iron EN-GJS-400-15; EN-GJS-500-7; EN 1563
2	Bottom body	Ductile cast iron EN-GJS-400-15; EN-GJS-500-7; EN 1563
3	Stand pipe	Ductile cast iron EN-GJS-400-15; EN-GJS-500-7; (Steel 1.0254; Stainless steel 1.4301) EN 1503-3
4	Sleeve	Brass CW617N EN 12165
5	Valve plug	Ductile cast iron EN-GJS-400-15; EN-GJS-500-7 EPDM; EN 1563 / EN ISO 1629
6	Cap	Aluminium AlSi EN 1706
7	Stem	Stainless steel 1.4021 EN 10088-1
8	Spindle	Stainless steel 1.4301 EN 10088-1
9	Outlet connector	Aluminium AlSi EN 1706
10	Bonnet	Aluminium AlSi; EN 1706 Ductile cast iron EN-GJS-400-15; EN 1563
11	Coupling	Ductile cast iron EN-GJS-400-15; EN-GJS-500-7; EN 1563
12	Mounted stem	Ductile cast iron EN-GJS-400-15; EN-GJS-500-7; EN 1563
13	Bottom flange	Ductile cast iron EN-GJS-400-15; EN-GJS-500-7; EN 1563
14	Gland seal	Brass CW617N EN 12165
15	Stem nut	Brass CW617N EN 12165
16	O – ring gasket	Rubber EPDM EN ISO 1629
17	Screw	Stainless steel A2 EN ISO 4017; EN ISO 4762
18	Nut	Stainless steel A4 EN ISO 4032
19	Dehydrator	Polipropylene PP EN ISO 1873-1
20	Socket	Bronze CuAl7 EN ISO 24373

We reserve the rights to modify the production program and the given data without separate notices due to the permanent company development

Pillar type fire hydrant
double closing

PN16

FIRE PREVENTION

VERSION

8005.4 DN80

Product description (standard execution):

- Complete drainage after full cut - off the flow
- Kv factor > 80 [m³/h] - (for 1x75 [mm]); Kv factor > 140 [m³/h] - (for 2x75 [mm]);
- Dehydration time < 15 [min.]
- Water-traces < 100 [ml] (for DN80)
- Replaceable head - without closing the valve
- Stainless steel stem with rolled thread
- O-ring stem sealing, packing cork protected against medium
- Forged packing cork protected against unscrewing
- EPDM fully vulcanized valve plug
- Welded brass socket constituting a monolithic body with the bottom body, resistant to scratches and surface damage
- Coat of arms place
- Initial opening < 3 turns; full opening after 8 turns
- MOT 80 Nm
- MST 250 Nm
- Corrosion resistant internal and external parts
- Stand pipe made of ductile cast iron pipe (coated with zinc)
- UV resistant epoxy coating minimum 250 microns according to EN 14901
- Resistant against disinfectants (suggested solution NaOCl)
- Flange connection and connector according EN 1092-2 (DIN 2501) pressure PN10; PN16
- Outlet connector 2xB 75 [mm] according to DIN 14318
- Control key according to PN-89/M – 74088
- Working pressure PN16
- Product according to EN 1074-1; EN 1074-6; EN 14384 TYPE A
- Product marking according to EN 19; EN 1074

Application:

Potable water lines; fire prevention systems temperature range to +50˚C

Test control:

Water pressure test according to EN 1074-1; EN 1074-2; EN 12266-1
Seat: 1,1 x PN
Body: 1,5 x PN
Operation torque test

Accessories:

Hydrant drainage cover - see: 8860

Execution variant:

Tap pipe made of stainless steel 1.4301

Installation:

In vertical position on horizontal pipelines

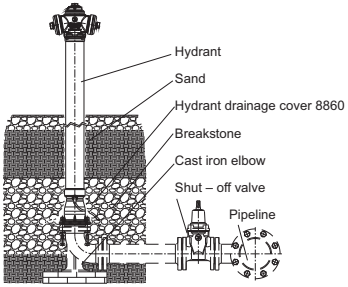

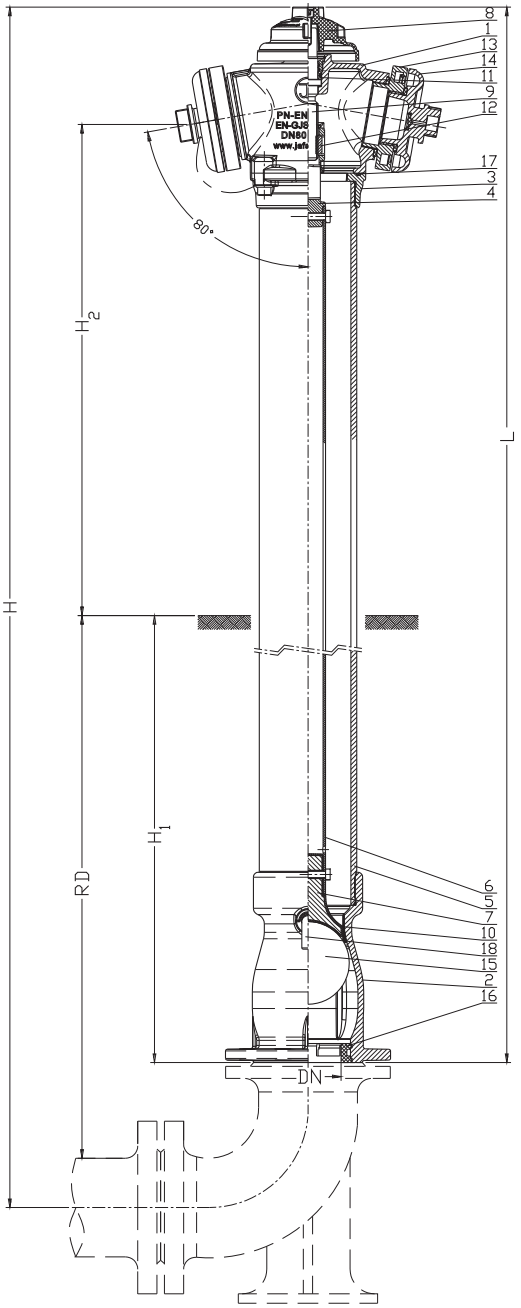

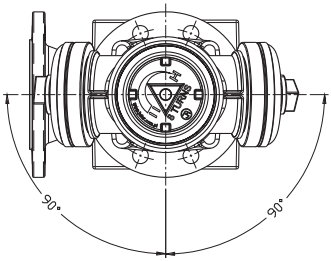

DN	RD	L	H	H_1	H_2	Weight
[mm]						[kg]
80	1000	1640	1805	880	565	58
80	1250	1890	2055	1130	565	63
80	1500	2140	2305	1380	565	68
80	1800	2440	2605	1680	565	74

No.	Part	Standard execution
1	Head	Ductile cast iron EN-GJS 400-15; EN-GJS 500-7; EN 1563
2	Ball chamber	Ductile cast iron EN-GJS 400-15; EN-GJS 500-7; EN 1563
3	Rotary flange	Ductile cast iron EN-GJS 400-15; EN-GJS 500-7; EN 1563
4	Cover nut	Ductile cast iron EN-GJS 400-15; EN-GJS 500-7; EN 1563
5	Stand pipe	Ductile cast iron EN-GJS 400-15; EN-GJS 500-7; EN1563 Steel 1.0037, EN 10025-2 Stainless steel 1.4301, EN 10088-1 EN 1503-1
6	Spindle	Stainless steel 1.4301 EN 10088-1
7	Valve plug	Ductile cast iron EN-GJS 400-15/ EPDM;EN 1563 ISO 1629
8	Cap	Aluminium AlSi EN 1706
9	Stem	Stainless steel 1.4021 EN 10088-1
10	Socket	Bronze CuAl7 EN-ISO 24373
11	Gland seal	BrassCW617N EN 12165
12	Stem nut	BrassCW617N EN 12165
13	Outlet connector B	Aluminium AlSi EN 1706
14	Outlet connector cover	Aluminium AlSi EN 1706
15	Ball	Polipropylene or aluminium AlSi / rubber EPDM EN 1706 / EN ISO 1629
16	Ball blockade	Polyethylenen PP EN ISO 1873-1
17	O-ring	Ductile cast iron EN-GJS 400-15; EN-GJS 500-7; EN 1563
18	Dehydrator	Polipropylene PP EN ISO 1873-1

We reserve the rights to modify the production program and the given data without separate notices due to the permanent company development

Pillar type fire hydrant Vintage design
double closing

PN16

FIRE PREVENTION

- **BREAKAGE PROTECTED**
- **MONOLITHIC HEAD WITH OUTLET CONNECTORS**
- **ROTATING HEAD 0° TO 360°**

Product description (standard execution):

• Decorative, vintage design
• Kv factor > 80m³/h - (for 1x75); Kv factor > 140m³/h - (for 2x75); Kv factor > 160m³/h - (for 1x110);
• Dehydration time < 15 min.
• Water-traces < 150 ml (for DN100)
• Complete drainage after full cut - off the flow
• Stainless steel stem with rolled thread
• O-ring stem sealing, packing cork protected against medium
• Forged packing cork protected against unscrewing
• EPDM fully vulcanized valve plug
• Coat of arms place
• Initial opening < 3 turns; full opening after 8 turns
• MOT 80 Nm
• MST 250 Nm
• Corrosion resistant internal and external parts
• Stand pipe made of ductile cast iron pipe (coated with zinc)
• UV resistant epoxy coating minimum 250 microns according to EN 14901
• Resistant against disinfectants (suggested solution NaOCl)
• Flange connection and connector according to EN 1092-2 (DIN 2501) pressure PN10; PN16
• Outlet connector B 75 according to DIN 14318
• Outlet connector A 110 according to DIN 14319
• Control key according to 89/M – 74088
• Working pressure PN16
• Product according to EN 1074-1; EN 1074-6; EN 14384 TYPE C
• Product marking according to EN 19; EN 1074

Application:

Potable water lines; fire prevention systems temperature range to +50˚C

Test control:

Water pressure test according to EN 1074-1; EN 1074-2; EN 12266-1
Seat: 1,1 x PN
Body: 1,5 x PN
Operation torque test

Accessories:

Hydrant drainage cover - see: 8860

Execution variant:

Self-leveling version
Tap pipe made of stainless steel 1.4301

Installation:

In vertical position on horizontal pipelines

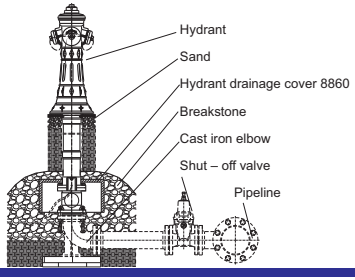

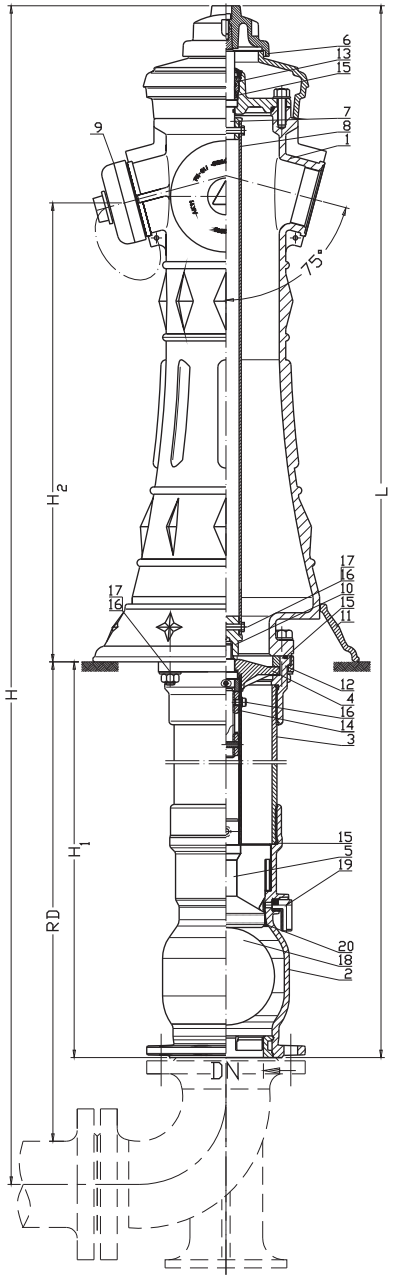

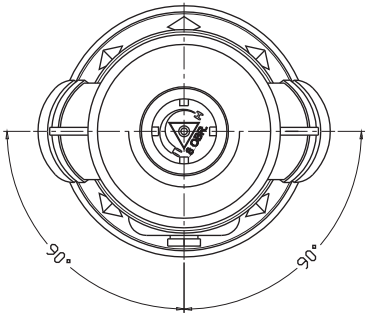

DN	RD	L	H	H_1	H_2	Weight
[mm]						[kg]
100	1000	1800	1955	880	640	74
100	1250	2050	2205	1130	640	79
100	1500	2300	2455	1380	640	84
100	1800	2600	2755	1680	640	90

No.	Part	Standard execution
1	Head	Ductile cast iron EN-GJS 400-15; EN-GJS 500-7; EN 1563
2	Ball chamber	Ductile cast iron EN-GJS 400-15; EN-GJS 500-7; EN 1563
3	Stand pipe	Ductile cast iron EN-GJS 400-15; EN-GJS 500-7; (Steel 1.0254; Stainless steel 1.4301) EN 1503-3
4	Socket	Ductile cast iron EN-GJS 400-15; EN-GJS 500-7; EN 1563
5	Valve plug	Ductile cast iron EN-GJS 400-15; EN-GJS 500-7 / EPDM; EN 1563 / EN ISO 1629
6	Cap	Aluminium AlSi EN 1706
7	Stem	Stainless steel 1.4021 EN 10088-1
8	Spindle	Stainless steel 1.4301 EN 10088-1
9	Socket	Aluminium AlSi EN 1706
10	Coupling	Ductile cast iron EN-GJS 400-15; EN-GJS 500-7; EN 1563
11	Ring	Grey iron EN-GJL 250; EN 1561 Ductile cast iron EN-GJS 500-7; EN 1563
12	Bottom flange	Ductile cast iron EN-GJS 400-15; EN-GJS 500-7; EN 1563
13	Gland seal	Brass CW617N EN 12165
14	Stem nut	Brass CW617N EN 12165
15	O – ring gasket	Rubber EPDM EN ISO 1629
16	Screw	Stainless steel A2 EN ISO 4017; EN ISO 4762
17	Nut	Stainless steel A4 EN ISO 4032
18	Ball	Polipropylene or aluminium AlSi / rubber EPDM EN 1706 / EN-ISO 1629
19	Dehydratyor	Polipropylene PP EN ISO 1873-1
20	Socket	Bronze CuAl7 EN ISO 24373

We reserve the rights to modify the production program and the given data without separate notices due to the permanent company development

Pillar type fire hydrant Vintage design
double closing

PN16

FIRE PREVENTION

- BREAKAGE PROTECTED
- MONOLITHIC HEAD WITH OUTLET CONNECTORS
- ROTATING HEAD 0° TO 360°

Product description (standard execution):

• Decorative, vintage design
• Kv factor > 80m³/h - (for 1x75); Kv factor > 140m³/h - (for 2x75);
• Dehydration time < 15 min.
• Water-traces < 100 ml (for DN80)
• Complete drainage after full cut - off the flow
• Stainless steel stem with rolled thread
• O-ring stem sealing, packing cork protected against medium
• Forged packing cork protected against unscrewing
• EPDM fully vulcanized valve plug
• Coat of arms place
• Initial opening < 3 turns; full opening after 8 turns
• MOT 80 Nm
• MST 250 Nm
• Corrosion resistant internal and external parts
• Stand pipe made of ductile cast iron pipe (coated with zinc)
• UV resistant epoxy coating minimum 250 microns according to EN 14901
• Resistant against disinfectants (suggested solution NaOCl)
• Flange connection and connector according to EN 1092-2 (DIN 2501) pressure PN10; PN16
• Outlet connector B 75 according to DIN 14318
• Control key according to 89/M – 74088
• Working pressure PN16
• Product according to EN 1074-1; EN 1074- 6; EN 14384 TYPE C
• Product marking according to EN 19; EN 1074

Application:

Potable water lines; fire prevention systems temperature range to +50˚C

Test control:

Water pressure test according to EN 1074-1; EN 1074-2; EN 12266-1
Seat: 1,1 x PN
Body: 1,5 x PN
Operation torque test

Accessories:

Hydrant drainage cover - see: 8860

Execution variant:

Self-leveling version
Tap pipe made of stainless steel 1.4301

Installation:

In vertical position on horizontal pipelines

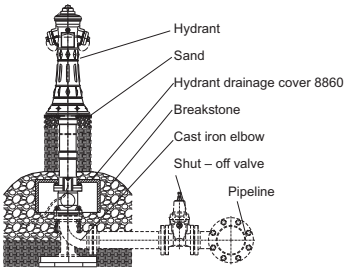

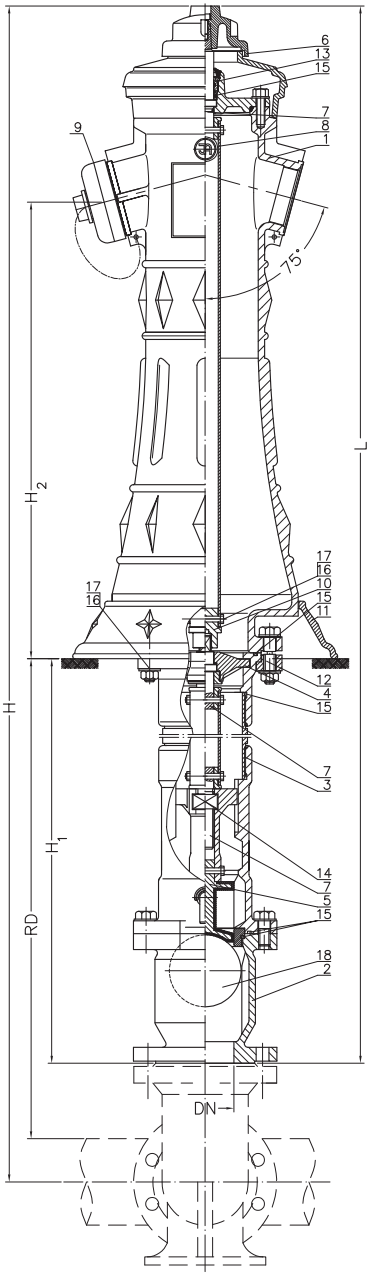

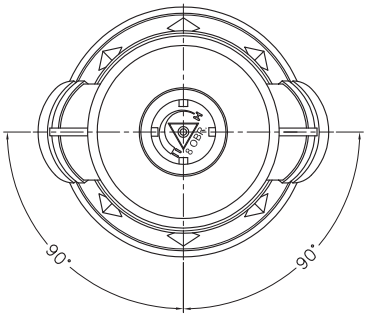

DN	RD	L	H	H_1	H_2	Weight
[mm]						[kg]
80	1000	1800	1955	880	64	75
80	1250	2050	2205	1130	640	80
80	1500	2300	2455	1380	640	85
80	1800	2600	2755	1680	640	91

No.	Part	Standard execution
1	Head	Ductile cast iron EN-GJS 400-15; EN-GJS 500-7; EN 1563
2	Ball chamber	Ductile cast iron EN-GJS 400-15; EN-GJS 500-7; EN 1563
3	Stand pipe	Ductile cast iron EN-GJS 400-15; EN-GJS 500-7 (Steel 1.0254; Stainless steel 1.4301) EN 1503-3
4	Mounted stem	Ductile cast iron EN-GJS 400-15; EN-GJS 500-7; EN 1563
5	Valve plug	Ductile cast iron EN-GJS 400-15 EN-GJS 500-7 / EPDM; EN 1563 / EN ISO 1629
6	Cap	Aluminium AlSi EN 1706
7	Stem	Stainless steel 1.4021 EN 10088-1
8	Spindle	Stainless steel 1.4301 EN 10088-1
9	Outlet connector	Aluminium AlSi EN 1706
10	Coupling	Ductile cast iron EN-GJS 400-15; EN-GJS 500-7; EN 1563
11	Ring	Grey iron EN-GJL 250; EN 1561 Ductile cast iron EN-GJS 500-7; EN 1563
12	Bottom flange	Ductile cast iron EN-GJS 400-15; EN-GJS 500-7; EN 1563
13	Gland seal	Brass CW617N EN 12165
14	Stem nut	Brass CW617N EN 12165
15	O – ring gasket	Rubber EPDM EN ISO 1629
16	Screw	Stainless steel A2 EN ISO 4017; EN ISO 4762
17	Nut	Stainless steel A4 EN ISO 4032
18	Ball	Polipropylene or aluminium AlSi / rubber EPDM EN 1706 / EN-ISO 1629

- other material variants on special request

We reserve the rights to modify the production program and the given data without separate notices due to the permanent company development

Public water fountain Vintage design

PN16

WATER

Product description (standard execution):

- Body made of ductile cast iron, vintage, retro-style design
- Closing valve parts made of brass
- Complete drainage after cut-off the flow
- Tap pipe made of stainless steel 1.4301
- Coat arms
- Resistant against disinfectants (suggested solution NaOCl)
- Epoxy coating minimum 250 microns according to EN 14901
- Working pressure PN16
- Threaded connector ¾" according to EN 10226-1
- Product marking according to EN 19; EN 1074

Application:

Water distribution in public and private area

Test control:

Water pressure test according to EN 1074-1; EN 1074-2; EN 12266-1
Seat: 1,1 x PN
Body: 1,5 x PN

Accessories:

Hydrant drainage cover - see: 8860

Execution variant:

Tap pipe made of stainless steel 1.4301

Installation:

In vertical position on horizontal pipelines

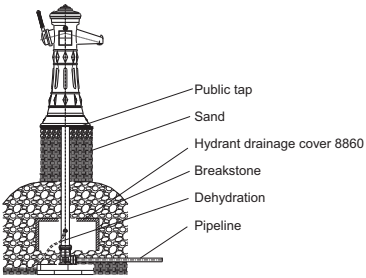

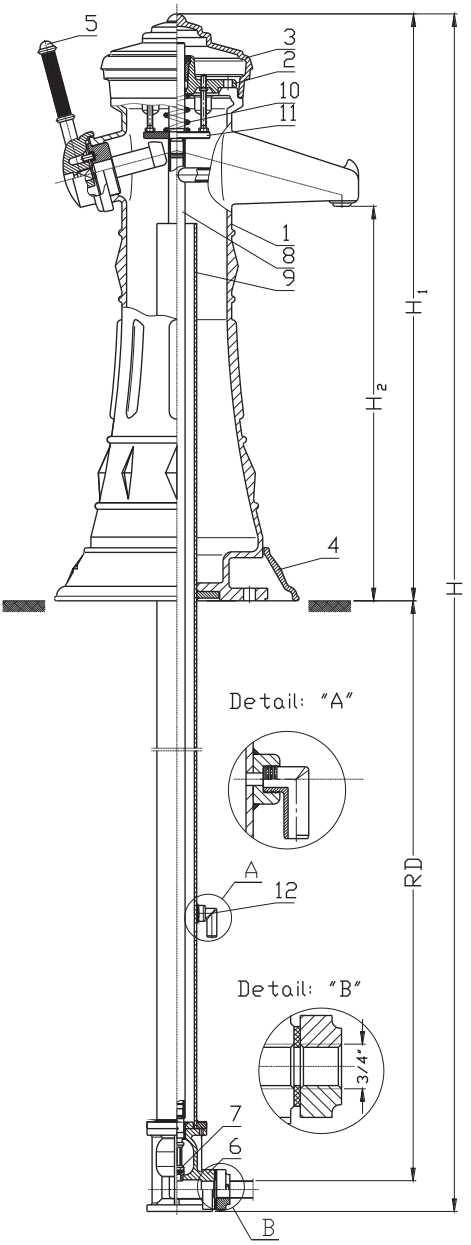

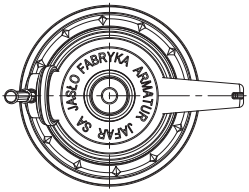

DN	RD	H*	H_1	H_2	Weight
[cal]	[mm]				[kg]
3/4"	1000	1930	885	600	35
3/4"	1250	2180	885	600	39
3/4"	1600	2430	885	600	43
3/4"	1800	2730	885	600	47

* - other lengths on request

No.	Part	Standard execution
1	Body	Ductile cast iron EN-GJS-400-15 EN 1563
2	Bonnet	Ductile cast iron EN-GJS-400-15 EN 1563
3	Cover	Ductile cast iron EN-GJS-400-15 EN 1563
4	Trim ring	Ductile cast iron EN-GJS-400-15 EN 1563
5	Lever	Grey iron EN-GJL-250 EN 1561
6	Valve chamber	Grey iron EN-GJL-250 EN 1561
7	Closing component	Steel 1.0037 EN 10025-2
8	Tap Pipe	Stainless steel 1.4301 EN 10088-1
9	Protection Pipe	Stainless steel 1.4301 EN 10088-1 Steel 1.0037 EN 10025-2
10	Compression spring	Steel 12R10 EN 10270-3
11	Lifting plate	Steel 1.0037 EN 10025-2
12	Dehydrator	Polipropylene PP EN ISO 1873-1

- other material variants on special request

We reserve the rights to modify the production program and the given data without separate notices due to the permanent company development

High efficiency collector

PN16

FIRE PREVENTION

No.	Part	Standard execution
1	Body	Stainless steel 1.4301 EN 10088-1 Steel P355 (1.0562) EN ISO 3183
2	Throttle	Producer calatogue 4497 GJS 400-15 EN 1563
3	Gear	Producer calatogue
4	Manometr	Producer calatogue
5	Outlet connector	Aluminium AlSi EN 1706
6	Bonnet	Aluminium AlSi EN 1706
7	Screw	Stainless steel A2 EN ISO 4017

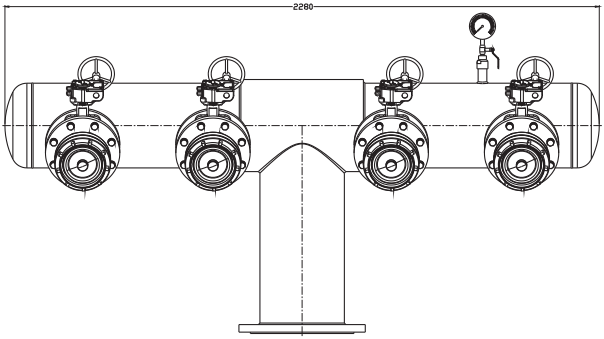

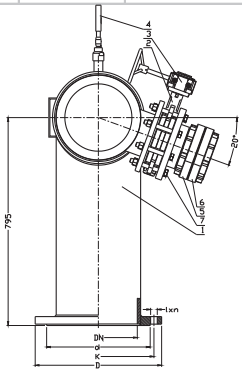

DN	PN	L	H	d	D	K	l	n	Weight
[mm]	[bar]	[mm]						-	[kg]
300	25	2280	795	395	485	430	30	16	326

Product description (standard execution):

- Body made of stainless steel
- Corrosion resistant internal and external parts
- Stainless steel mounting screws
- Resistant against disinfectants (suggested solution NaOCl)
- Flange connection and connector according EN 1092-2 pressure PN 25
- **Outlet connector 4x150 6"**
- Working pressure PN16
- Product marking according EN 19, EN 1074

Application:

Potable water lines; fire prevention systems temperature range to +50˚C

Testy control:

Water pressure test according to EN 1074-1, EN 1074-2, EN 12266-1
Body: 1,5 x PN
Seat: 1,1 x PN
Operation torque test

We reserve the rights to modify the production program and the given data without separate notices due to the permanent company development

Pillar type fire hydrant
with double closing

PN16

FIRE PREVENTION

- **BREAKAGE PROTECTED**
- **MONOLITHIC HEAD WITH OUTLET CONNECTORS**
- **ROTATING HEAD 0° TO 360°**

Product description (standard execution):

- Complete drainage after full cut off the flow
- Kv factor > 140 m^3/h
- Dehydration time < 15 min.
- Water-traces < 100 ml (for DN80); < 150 ml (for DN100); < 200 ml (for DN150)
- Replaceable head without closing the valve
- Stainless steel stem with rolled thread
- O-ring stem sealing, packing cork protected against medium
- Forged packing cork protected against unscrewing
- EPDM fully vulcanized valve plug
- Coat of arms place
- Beginning of opening < 2 turns; full opening after 13 turns for DN80, DN100, 17 turns for DN150
- MOT 80 Nm
- mST 250 Nm
- Corrosion resistant internal and external parts
- UV resistant epoxy coating minimum 250 microns according to EN 14901
- Resistant for disinfectants (suggested solution NaOCl)
- Flange connection and connector according to EN 1092-2 (DIN 2501) pressure PN10; PN16
- Outlet connector 40 according to NF S61-213/CN
- Outlet connector 65 according to NF S61-213/CN
- Outlet connector 100 according to NF S61-213/CN
- Working pressure PN16
- Product according to EN 1074-1, EN 1074-6 and NF EN 14384 TYPE C
- Product marking according to EN 19; EN 1074

Application:

Potable water lines; fire prevention systems temperature range to +50˚C

Test control:

Water pressure test according to EN 1074-1; EN 1074-2; EN 12266-1
Seat: 1,1 x PN
Body 1,5 x PN
Operation torque test

Accessories:

Elbow S type 9270
Protection of hydrant 8790

Execution types:

Spare parts made of bronze instead of brass
Spare parts made of SS 1.4401 instead of SS 1.4301, SS 1.4021
Bonnets and outlets made of bronze

Assembling:

In vertical position on horizontal pipelines.

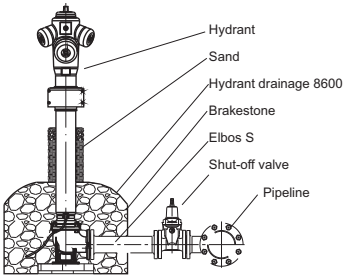

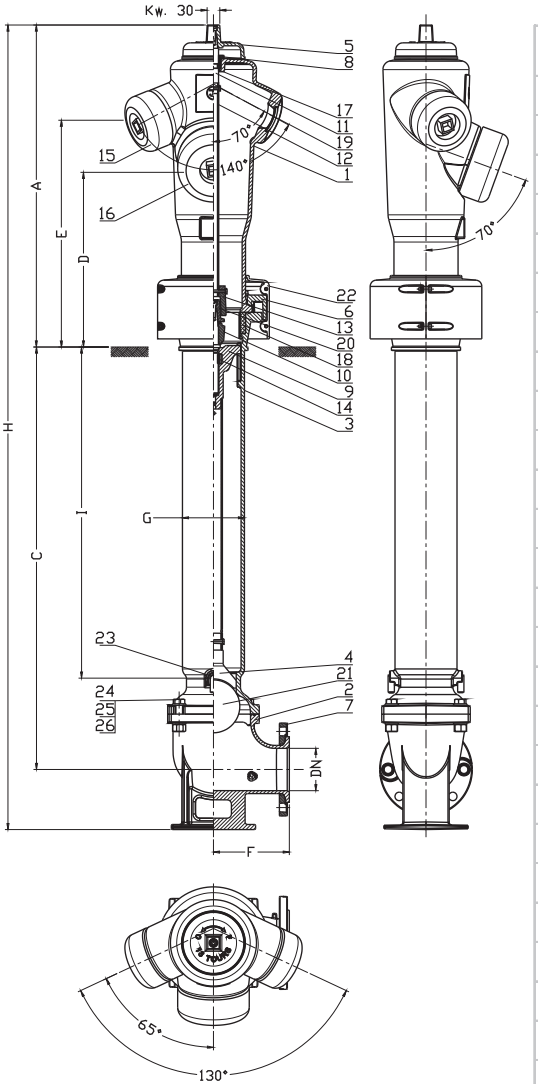

No.	Part	Standard execution
1	Head	Ductile cast iron EN-GJS 400-15; EN 1563
2	Elbow S	Ductile cast iron EN-GJS 400-15; EN 1563
3	Stand pipe	Ductile cast iron EN-GJS 400-15; EN 1563
4	Valve plug	Ductile cast iron EN-GJS 400-15 / EPDM EN 1563 / ISO 1629
5	Cap	Ductile cast iron EN-GJS 400-15; EN 1563
6	Break flange	Ductile cast iron EN-GJS 400-15; EN 1563
7	Free flange	Ductile cast iron EN-GJS 400-15; EN 1563
8	Gland seal	Brass CW617N EN 12165
9	Screw protection	Ductile cast iron EN-GJS 400-15; EN 1563
10	Coupling wings	Brass CW617N EN 12165
11	Stem	Stainless steel 1.4021 EN 10088-1
12	Spindle	Stainless steel 1.4301 EN 10088-1
13	Coupling	Ductile cast iron EN-GJS 400-15; EN 1563
14	Stem nut	Brass CW617N EN 12165
15	Outlet connector B	Aluminium AlSi EN 1706:2011
16	Outlet connector A	Aluminium AlSi EN 1706
17	O - ring gasket	Rubber EPDM ISO 1629
18	Blockade	Aluminium AlSi EN 1706
19	Screw	Stainless steel EN ISO 4017
20	Bottom coupling cap	Ductile cast iron EN-GJS 400-15; EN 1563
21	Ball	Polipropylene or Aluminium AlSi / Rubber EPDM
22	Protection of breaking zone	Polipropylene PP EN ISO 1873-1
23	Dehydrator	Polipropylene PP EN ISO 1873-1
24	Screw	Stainless steel A2 EN ISO 4017
25	Nut	Stainless steel A4 EN ISO 4032
26	Washer	Stainless steel A2 EN ISO 7091

DN	H	C	A	E	D	I	G	F	Weight	Connection		
[mm]									[kg]	40	65	100
80	1900	1000	760	540	440	785	148	180	96	x2	x1	-
	2100	1200				985			103	x2	x1	-
	1900	1000		-	440	785	148	180	96	-	x1	-
	2100	1200				985			103	-	x1	-
100	1900	1000		540	440	785	148	180	96	-	x2	x1
	2100	1200				985			103	-	x2	x1
150	1900	1000		430	540	785	190	195	120	-	x1	x2
	2100	1200				985			128	-	x1	x2

We reserve the rights to modify the production program and the given data without separate notices due to the permanent company development

Pillar type fire hydrant
with single closing

PN16

FIRE PREVENTION

- BREAKAGE PROTECTED
- MONOLITHIC HEAD WITH OUTLET CONNECTORS
- ROTATING HEAD 0° TO 360°

Product description (standard execution):

• Complete drainage after full cut off the flow
• Kv factor > 140 m³/h
• Dehydration time < 15 min.
• Water-traces < 100 ml (for DN80); < 150 ml (for DN100); < 200 ml (for DN150)
• Replaceable head without closing the valve
• Stainless steel stem with rolled thread
• O-ring stem sealing, packing cork protected against medium
• Forged packing cork protected against unscrewing
• EPDM fully vulcanized valve plug
• Coat of arms place
• Beginning of opening < 2 turns; full opening after 13 turns for DN80, DN100, 17 turns for DN150
• MOT 80 Nm
• mST 250 Nm
• Corrosion resistant internal and external parts
• UV resistant epoxy coating minimum 250 microns according to EN 14901
• Resistant for disinfectants (suggested solution NaOCl)
• Flange connection and connector according to EN 1092-2 (DIN 2501) pressure PN10; PN16
• Outlet connector 40 according to NF S61-213/CN
• Outlet connector 65 according to NF S61-213/CN
• Outlet connector 100 according to NF S61-213/CN
• Working pressure PN16
• Product according to EN 1074-1; EN 1074-6 and NF EN 14384 TYPE C
• Product marking according to EN 19; EN 1074

Application:

Potable water lines; fire prevention systems temperature range to +50˚C

Test control:

Water pressure test according to EN 1074-1; EN 1074-2; EN 12266-1
Seat: 1,1 x PN
Body 1,5 x PN
Operation torque test

Accessories:

Elbow S type 9270
Protection of hydrant 8790

Execution types:

Spare parts made of bronze instead of brass
Spare parts made of SS 1.4401 instead of SS 1.4301, SS 1.4021
Bonnets and outlets made of bronze

Assembling:

In vertical position on horizontal pipelines.

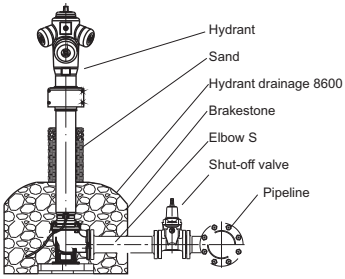

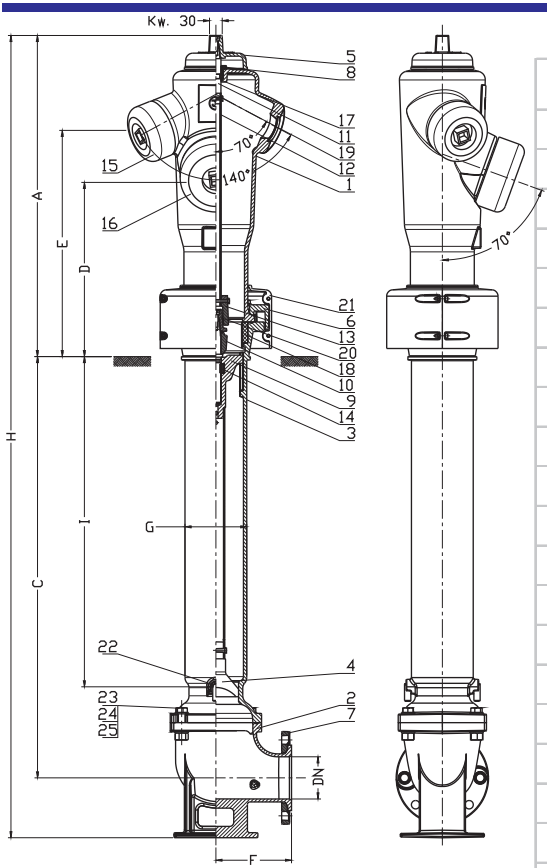

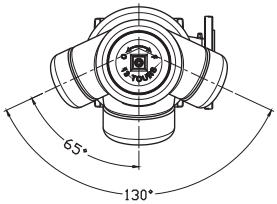

No.	Part	Standard execution
1	Head	Ductile cast iron EN-GJS 400-15; EN 1563
2	Elbow S	Ductile cast iron EN-GJS 400-15; EN 1563
3	Stand pipe	Ductile cast iron EN-GJS 400-15; EN 1563
4	Valve plug	Ductile cast iron EN-GJS 400-15 / EPDM EN 1563 / ISO 1629
5	Cap	Ductile cast iron EN-GJS 400-15; EN 1563
6	Brake flange	Ductile cast iron EN-GJS 400-15; EN 1563
7	Free flange	Ductile cast iron EN-GJS 400-15; EN 1563
8	Gland seal	Brass CW617N EN 12165
9	Screw protection	Ductile cast iron EN-GJS 400-15; EN 1563
10	Coupling wings	Brass CW617N EN 12165
11	Stem	Stainless steel 1.4021 EN 10088-1
12	Spindle	Stainless steel 1.4301 EN 10088-1
13	Coupling	Ductile cast iron EN-GJS 400-15; EN 1563
14	Stem nut	Brass CW617N EN 12165
15	Outlet connector B	Aluminium AlSi EN 1706
16	Outlet connector A	Aluminium AlSi EN 1706
17	O - ring gasket	Rubber EPDM ISO 1629
18	Blockade	Aluminium AlSi EN 1706
19	Screw	Stainless steel A2 EN ISO 4017
20	Bottom coupling cap	Ductile cast iron EN-GJS 400-15; EN 1563
21	Protection of breaking zone	Polipropylene PP EN ISO 1873-1
22	Dehydrator	Polipropylene PP EN ISO 1873-1
23	Screw	Stainless steel A2 EN ISO 4017
24	Nut	Stainless steel A4 EN ISO 4032
25	Washer	Stainless steel A2 EN ISO 7091

DN	H	C	A	E	D	I	G	F	Weight	Connection		
[mm]									[kg]	40	65	100
80	1900	1000	760	540	440	785	148	180	95	x2	x1	-
	2100	1200				985			102	x2	x1	-
	1900	1000		-	440	785	148	180	95	-	x1	-
	2100	1200				985			102	-	x1	-
100	1900	1000		540	440	785	148	180	95	-	x2	x1
	2100	1200				985			102	-	x2	x1
150	1900	1000		430	540	785	190	195	118	-	x1	x2
	2100	1200				985			126	-	x1	x2

We reserve the rights to modify the production program and the given data without separate notices due to the permanent company development

Pillar type fire hydrant
with double closing

PN16

FIRE PREVENTION

- MONOLITHIC HEAD WITH OUTLET CONNECTORS
- ROTATING HEAD 0° TO 360°

Product description (standard execution):

• Complete drainage after full cut off the flow
• Kv factor > 140 m^3/h
• Dehydration time < 15 min.
• Water-traces < 100 ml (for DN80); < 150 ml (for DN100); < 200 ml (for DN150)
• Replaceable head without closing the valve
• Stainless steel stem with rolled thread
• O-ring stem sealing, packing cork protected against medium
• Forged packing cork protected against unscrewing
• EPDM fully vulcanized valve plug
• Coat of arms place
• Beginning of opening < 2 turns; full opening after 13 turns for DN80, DN100, 17 turns for DN150
• MOT 80 Nm
• mST 250 Nm
• Corrosion resistant internal and external parts
• UV resistant epoxy coating minimum 250 microns according to EN 14901
• Resistant for disinfectants (suggested solution NaOCl)
• Flange connection and connector according to EN 1092-2 (DIN 2501) pressure PN10; PN16
• Outlet connector 40 according to NF S61-213/CN
• Outlet connector 65 according to NF S61-213/CN
• Outlet connector 100 according to NF S61-213/CN
• Working pressure PN16
• Product according to EN 1074-1, EN 1074-6 and NF EN 14384 TYPE A
• Product marking according to EN 19; EN 1074

Application:

Potable water lines; fire prevention systems temperature range to +50˚C

Test control:

Water pressure test according to EN 1074-1; EN 1074-2; EN 12266-1
Seat: 1,1 x PN
Body 1,5 x PN
Operation torque test

Accessories:

Elbow S type 9270
Protection of hydrant 8790

Execution types:

Spare parts made of bronze instead of brass
Spare parts made of SS 1.4401 instead of SS 1.4301, SS 1.4021
Bonnets and outlets made of bronze

Assembling:

In vertical position on horizontal pipelines.

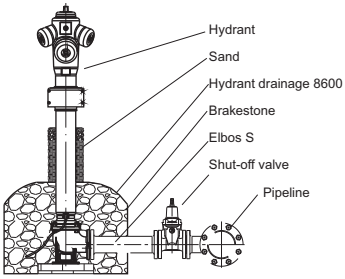

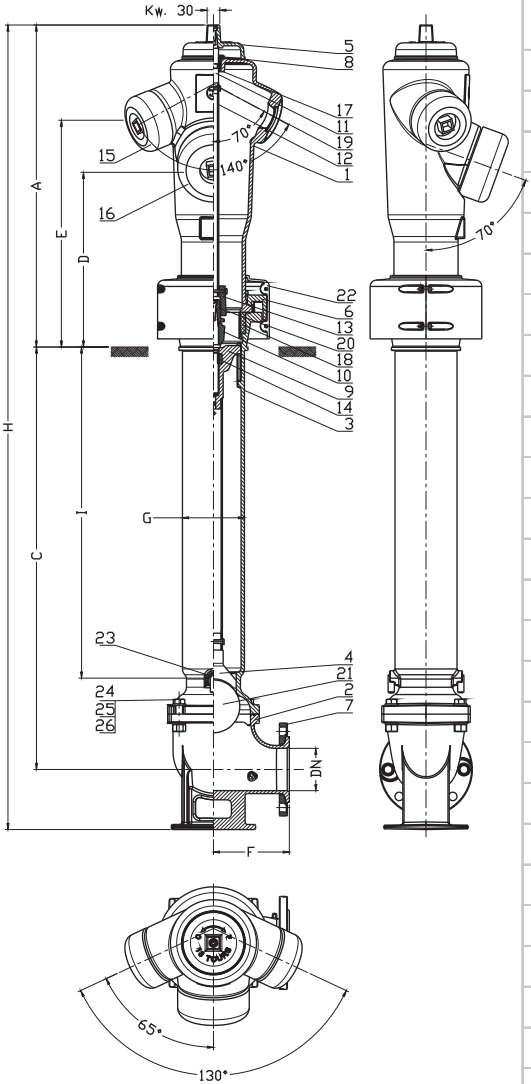

No	Part	Standard execution
1	Head	Ductile cast iron EN-GJS 400-15; EN 1563
2	Elbow S	Ductile cast iron EN-GJS 400-15; EN 1563
3	Stand pipe	Ductile cast iron EN-GJS 400-15; EN 1563
4	Valve plug	Ductile cast iron EN-GJS 400-15 / EPDM EN 1563 / ISO 1629
5	Cap	Ductile cast iron EN-GJS 400-15; EN 1563
6	Break flange	Ductile cast iron EN-GJS 400-15; EN 1563
7	Free flange	Ductile cast iron EN-GJS 400-15; EN 1563
8	Gland seal	Brass CW617N EN 12165
9	Screw protection	Ductile cast iron EN-GJS 400-15; EN 1563
10	Coupling wings	Brass CW617N EN 12165
11	Stem	Stainless steel 1.4021 EN 10088-1
12	Spindle	Stainless steel 1.4301 EN 10088-1
13	Coupling	Ductile cast iron EN-GJS 400-15; EN 1563
14	Stem nut	Brass CW617N EN 12165
15	Outlet connector B	Aluminium AlSi EN 1706
16	Outlet connector A	Aluminium AlSi EN 1706
17	O - ring gasket	Rubber EPDM ISO 1629
18	Blockade	Aluminium AlSi EN 1706
19	Screw	Stainless steel EN ISO 4017
20	Bottom coupling cap	Ductile cast iron EN-GJS 400-15; EN 1563
21	Ball	Polipropylene or Aluminium AlSi / Rubber EPDM
22	Protection of breaking zone	Polipropylene PP EN ISO 1873-1
23	Dehydrator	Polipropylene PP EN ISO 1873-1
24	Screw	Stainless steel A2 EN ISO 4017
25	Nut	Stainless steel A4 EN ISO 4032
26	Washer	Stainless steel A2 EN ISO 7091

DN	H	C	A	E	D	I	G	F	Weight	Connection		
[mm]									[kg]	40	65	100
80	1900	1000	760	540	440	785	148	180	96	x2	x1	-
	2100	1200				985			103	x2	x1	-
	1900	1000		-	440	785	148	180	96	-	x1	-
	2100	1200				985			103	-	x1	-
100	1900	1000		540	440	785	148	180	96	-	x2	x1
	2100	1200				985			103	-	x2	x1
150	1900	1000		430	540	785	190	195	120	-	x1	x2
	2100	1200				985			128	-	x1	x2

We reserve the rights to modify the production program and the given data without separate notices due to the permanent company development

Pillar type fire hydrant
with single closing

PN16

FIRE PREVENTION

- MONOLITHIC HEAD WITH OUTLET CONNECTORS
- ROTATING HEAD 0° TO 360°

Product description (standard execution):

• Complete drainage after full cut off the flow
• Kv factor > 140 m^3/h
• Dehydration time < 15 min.
• Water-traces < 100 ml (for DN80); < 150 ml (for DN100); < 200 ml (for DN150)
• Replaceable head without closing the valve
• Stainless steel stem with rolled thread
• O-ring stem sealing, packing cork protected against medium
• Forged packing cork protected against unscrewing
• EPDM fully vulcanized valve plug
• Coat of arms place
• Beginning of opening < 2 turns; full opening after 13 turns for DN80, DN100, 17 turns for DN150
• MOT 80 Nm
• mST 250 Nm
• Corrosion resistant internal and external parts
• UV resistant epoxy coating minimum 250 microns according to EN 14901
• Resistant for disinfectants (suggested solution NaOCl)
• Flange connection and connector according to EN 1092-2 (DIN 2501) pressure PN10; PN16
• Outlet connector 40 according to NF S61-213/CN
• Outlet connector 65 according to NF S61-213/CN
• Outlet connector 100 according to NF S61-213/CN
• Working pressure PN16
• Product according to EN 1074-1, EN 1074-6 and NF EN 14384 TYPE A
• Product marking according to EN 19; EN 1074

Application:

Potable water lines; fire prevention systems temperature range to +50˚C

Test control:

Water pressure test according to EN 1074-1; EN 1074-2; EN 12266-1
Seat: 1,1 x PN
Body 1,5 x PN
Operation torque test

Accessories:

Elbow S type 9270
Protection of hydrant 8790

Execution types:

Spare parts made of bronze instead of brass
Spare parts made of SS 1.4401 instead of SS 1.4301, SS 1.4021
Bonnets and outlets made of bronze

Assembling:

In vertical position on horizontal pipelines.

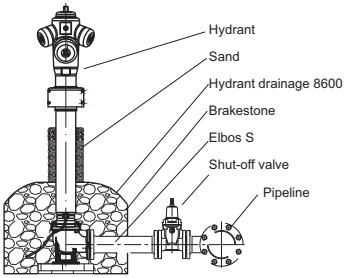

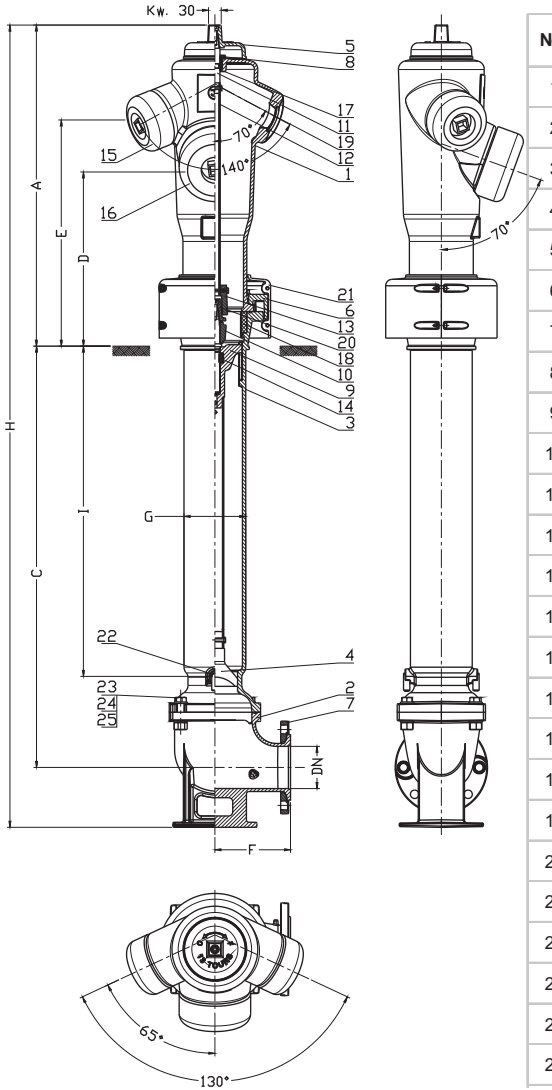

No.	Part	Standard execution
1	Head	Ductile cast iron EN-GJS 400-15; EN 1563
2	Elbow S	Ductile cast iron EN-GJS 400-15; EN 1563
3	Stand pipe	Ductile cast iron EN-GJS 400-15; EN 1563
4	Valve plug	Ductile cast iron EN-GJS 400-15 / EPDM EN 1563 / ISO 1629
5	Cap	Ductile cast iron EN-GJS 400-15; EN 1563
6	Break flange	Ductile cast iron EN-GJS 400-15; EN 1563
7	Free flange	Ductile cast iron EN-GJS 400-15; EN 1563
8	Gland seal	Brass CW617N EN 12165
9	Screw protection	Ductile cast iron EN-GJS 400-15; EN 1563
10	Coupling wings	Brass CW617N EN 12165
11	Stem	Stainless steel 1.4021 EN 10088-1
12	Spindle	Stainless steel 1.4301 EN 10088-1
13	Coupling	Ductile cast iron EN-GJS 400-15; EN 1563
14	Stem nut	Brass CW617N EN 12165
15	Outlet connector B	Aluminium AlSi EN 1706
16	Outlet connector A	Aluminium AlSi EN 1706
17	O - ring gasket	Rubber EPDM ISO 1629
18	Blockade	Aluminium AlSi EN 1706
19	Screw	Stainless steel EN ISO 4017
20	Bottom coupling cap	Ductile cast iron EN-GJS 400-15; EN 1563
21	Protection of breaking zone	Polipropylene PP EN ISO 1873-1
22	Washer	Brass CuZn39Pb1Al-B EN 1982
23	Dehydrator	Polipropylene PP EN ISO 1873-1
24	Screw	Stainless steel A2 EN ISO 4017
25	Nut	Stainless steel A4 EN ISO 4032

DN	H	C	A	E	D	I	G	F	Weight	Connection		
[mm]									[kg]	40	65	100
80	1900	1000	760	540	440	785	148	180	95	x2	x1	-
	2100	1200				985			102	x2	x1	-
	1900	1000		-	440	785	148	180	95	-	x1	-
	2100	1200				985			102	-	x1	-
100	1900	1000		540	440	785	148	180	95	-	x2	x1
	2100	1200				985			102	-	x2	x1
150	1900	1000		430	540	785	190	195	118	-	x1	x2
	2100	1200				985			126	-	x1	x2

We reserve the rights to modify the production program and the given data without separate notices due to the permanent company development

Full bore underground hydrant
with plate valve

PN16

FIRE PREVENTION

Product description (standard execution):

- Complete drainage after full cut - off the flow
- Kv factor > 60m³/h
- Dehydration time < 15 min.
- Water-traces < 100 ml
- Plate valve made of stainless steel 1.4310
- Dust protection
- Initial opening < 4 turns; full opening after 15 turns
- MOT 105 Nm
- MST 210 Nm
- Corrosion resistant internal and external parts
- Epoxy coating minimum 250 microns according to EN 14901
- Resistant against disinfectants (suggested solution NaOCl)
- Flange connection and connector according to EN 1092-2 (DIN 2501) pressure PN10; PN16
- Jaw connection according to DIN 3221 "C"
- Working pressure PN16
- Product according to EN 1074-1; EN 1074-6; EN 14339
- Product marking according to EN 19; EN 1074

Application:

Potable water lines and fire prevention systems for monitoring cleaning and uptake water in temperature range to +50˚C

Test control:

Water pressure test according to EN 1074-1; EN 1074-2; EN 12266-1
Seat: 1,1 x PN
Body: 1,5 x PN
Operation torque test

Accessories:

Street box - see: 9502 – PEHD-GJL

Installation:

In vertical position on horizontal pipelines

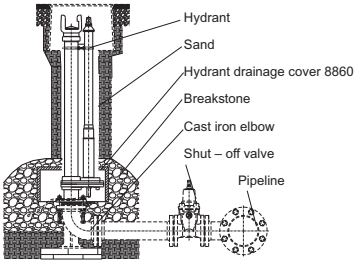

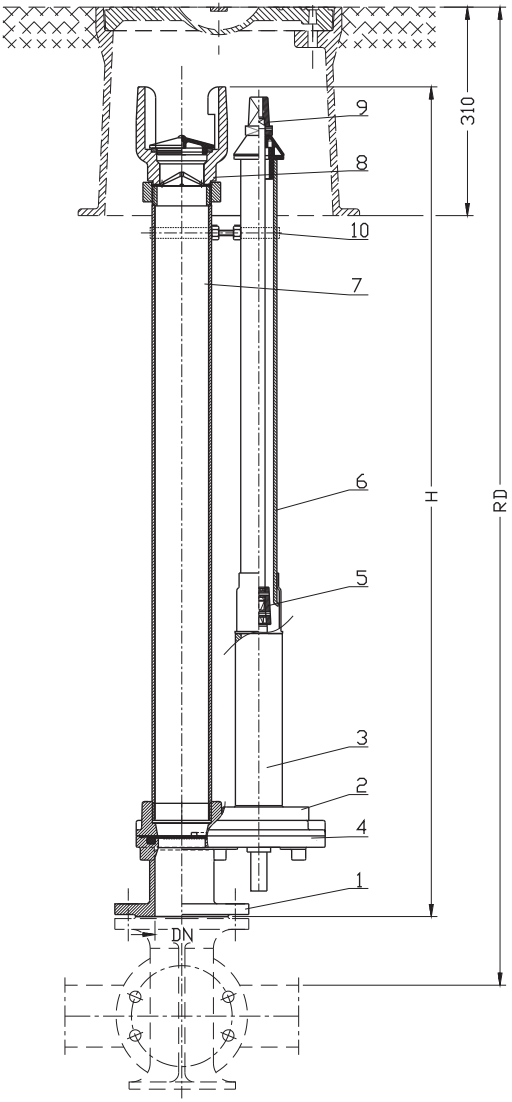

DN	RD	H	Weight
[mm]			[kg]
80	1000	750	32
80	1250	1000	35
80	1500	1250	38
80	1800	1500	41

No.	Part	Standard execution
1	Body	Ductile cast iron EN-GJS-400-15 EN 1563
2	Bonnet	Ductile cast iron EN-GJS-400-15 EN 1563
3	Gear	Ductile cast iron EN-GJS-400-15, EN 1563 Stainless steel 1.4021, EN 10088-1 Brass CW617N, EN 12165
4	Plate valve	Stainless steel 1.4301 EN 10088-1
5	Coupling	Ductile cast iron EN-GJS-400-15/EPDM EN 1563 / EN ISO 1629
6	Plastic protection pipe	Producer calatogue TYP 9010 (Spindle extension)
7	Stand pipe	Steel 1.0037, EN 10025-2 Stainless steel 1.4301, EN 10088-1 EN 1503-1
8	Bayonet socket	Ductile cast iron EN-GJS-400-15 EN 1563
9	Cap	Ductile cast iron EN-GJS-400-15 EN 1563
10	Handle	Steel 1.0038 EN 10025-1 EPDM; EN ISO 1629

- other material variants on special request

We reserve the rights to modify the production program and the given data without separate notices due to the permanent company development

Underground hydrant
single closing

PN16

FIRE PREVENTION

8851.3
DN80

8851.1
DN100

Product description (standard execution):

- Complete drainage after cut - off the flow
- Kv factor > 60m³/h - (for DN80); Kv factor > 75m³/h - (for DN100);
- Dehydration time < 15 min.
- Water-traces < 100 ml (for DN80), < 150 ml (for DN100)
- Monolithic stand pipe made of ductile cast iron pipe DN80
- Stainless steel stem with rolled thread
- O-ring seal, o-ring zone, plug seal separated from the medium
- Forged packing cork protected against unscrewing
- EPDM fully vulcanized valve plug
- Initial opening < 3 turns; full opening after 8 turns
- MOT 105 Nm (for DN80), 130 Nm (for DN100)
- MST 210 Nm (for DN80), 260 Nm (for DN100)
- Corrosion resistant internal and external parts
- Epoxy coating minimum 250 microns according to EN 14901
- Resistant against disinfectants (suggested solution NaOCl)
- Flange connection and connector according to EN 1092-2 (DIN 2501) pressure PN10; PN16
- Bayonet socket according to DIN 3221 "C"
- Working pressure PN16
- Product according to EN 1074-1; EN 1074-6; EN 14339
- Product marking according to EN 19; EN 1074

Application:

Potable water lines; fire prevention systems temperature range to +50˚C

Installation:

In vertical position on horizontal pipelines

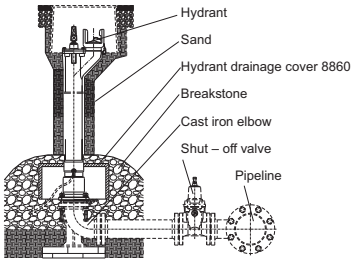

Test control:

Water pressure test according to EN 1074-1; EN 1074-2; EN 12266-1
Seat: 1,1 x PN
Body: 1,5 x PN
Operation torque test

Accessories:

Street box for hydrant - see: 9502-PEHD-GJL
Hydrant drainage cover - see: 8860

Execution variant:

Stainless steel stand pipe 1.4301

8851.1

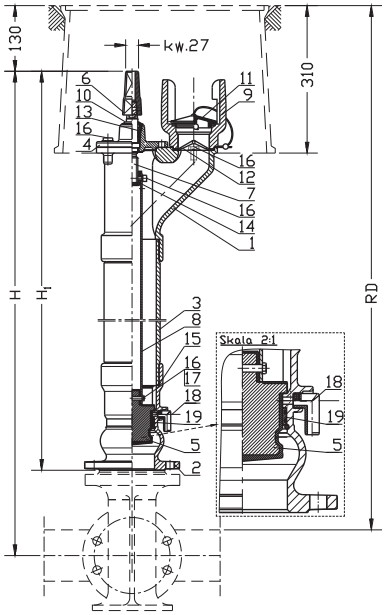

8851.3

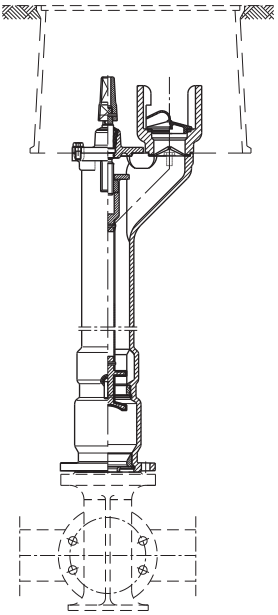

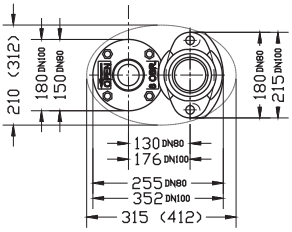

No.	Part	Standard execution
1	Head	Ductile cast iron EN-GJS-400-15; EN-GJS-500-7 EN 1563
2	Bottom body	
3	Stand pipe	Ductile cast iron EN-GJS-400-15; EN-GJS-500-7; EN 1563; Steel 1.0037, EN 10025-2 EN 1503-1
4	Bonnet	Ductile cast iron EN-GJS 400-15, EN-GJS 500-7 EN 1563
5	Valve plug	Ductile cast iron EN-GJS-400-15; EN-GJS-500-7/EPDM EN 1563 / EN ISO 1629
6	Cap	Ductile cast iron EN-GJS 400-15, EN-GJS 500-7 EN 1563
7	Stem	Stainless steel 1.4021, EN 10088-1
8	Spindle	Steel 1.0037; EN 10025-2 Stainless steel 1.4021; EN 10088-1
9	Bayonet socket	Ductile cast iron EN-GJS-400-15; EN-GJS-500-7; EN 1563
10	Gasket	Rubber EPDM, EN ISO 1629
11	Outlet gasket	Rubber EPDM, EN ISO 1629
12	Deflector	Rubber EPDM, EN ISO 1629
13	Gland seal	Brass CW617N, EN 12165
14	Stem nut	Brass CW617N, EN 12165
15	O-ring gasket	Rubber EPDM, EN ISO 1629
16	Screw	Steel Fe/Zn5; Stainless steel A2 EN ISO 4017; EN ISO 4762
17	Nut	Steel Fe/Zn5; Stainless steel A4 EN ISO 4032
18	Dehydrator	Polipropylene PP EN ISO 1873-1
19	Socket	Brass CW617N, EN 12165

DN	RD	H	H_1	Weight [kg]	
[mm]				8851.1	8851.3
80	750	665	500	-	18
80	1000	915	750	25	32
80	1250	1165	1000	30	38
80	1500	1415	1250	35	47
80	1800	1715	1500	42	-
100	1000	935	750	42	-
100	1250	1185	1000	45	-
100	1500	1435	1250	48	-
100	1800	1735	1500	54	-

We reserve the rights to modify the production program and the given data without separate notices due to the permanent company development

Underground hydrant
double closing

PN16

FIRE PREVENTION

Underground hydrant
double closing

8852.2

Product description (standard execution):

- Complete drainage after cut - off the flow
- Kv factor > 60m³/h - (for DN80); Kv factor > 75m³/h - (for DN100);
- Dehydration time < 15 min.
- Water-traces < 100 ml (for DN80), < 150 ml (for DN100)
- Monolithic stand pipe made of ductile cast iron pipe DN80
- Stainless steel stem with rolled thread
- O-ring stem sealing, packing cork protected against medium
- Forged packing cork protected against unscrewing
- EPDM fully vulcanized valve plug
- Coat of arms place
- Initial opening < 3 turns; full opening after 8 turns
- MOT 105 Nm (for DN80), 130 Nm (for DN100)
- MST 210 Nm (for DN80), 260 Nm (for DN100)
- Corrosion resistant internal and external parts
- Epoxy coating minimum 250 microns according to EN 14901
- Resistant against disinfectants (suggested solution NaOCl)
- Flange connection and connector according to EN 1092-2 (DIN 2501) pressure PN10; PN16
- Bayonet socket according to DIN 3221 "C"
- Working pressure PN16
- Product according to EN 1074-1; EN 1074-6; EN 14339
- Product marking according to EN 19; EN 1074

Application:

Potable water lines; fire prevention systems temperature range to +50˚C

Installation:

In vertical position on horizontal pipelines

Test control:

Water pressure test according to EN 1074-1; EN 1074-2; EN 12266-1
Seat: 1,1 x PN
Body: 1,5 x PN
Operation torque test

Accessories:

Street box for hydrant - see: 9502-PEHD-GJL
Hydrant drainage cover - see: 8860

Execution variant:

Stainless steel stand pipe 1.4301

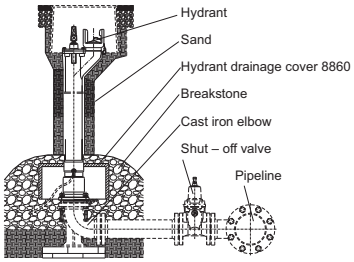

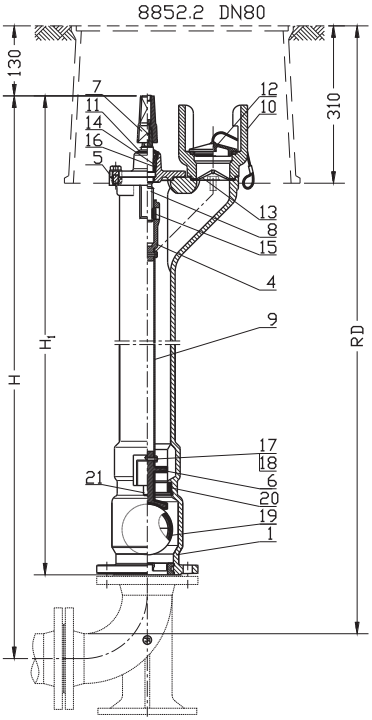

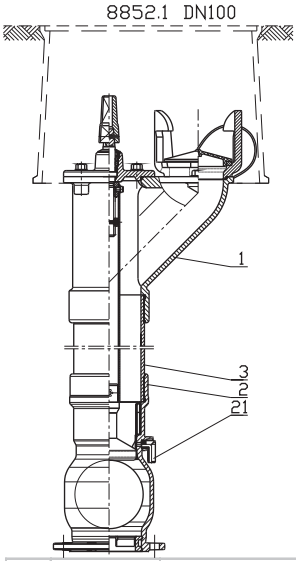

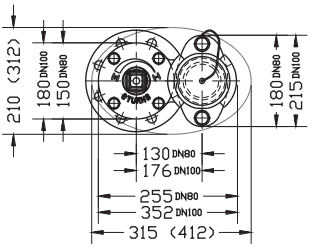

No.	Part	Material
1	Head	Ductile cast iron EN-GJS-400-15; EN-GJS-500-7; EN 1563
2	Bottom body	Ductile cast iron EN-GJS-400-15; EN-GJS-500-7; EN 1563
3	Stand pipe	Ductile cast iron EN-GJS-400-15; EN-GJS-500-7; Steel 1.0037; EN10025-2 Stainless steel 1.4301; EN 10088-1 EN 1503-1
4	Nut seat	Ductile cast iron EN-GJS-400-15; EN-GJS-500-7; EN 1563
5	Bonnet	Ductile cast iron EN-GJS-400-15; EN-GJS-500-7; EN 1563
6	Valve plug	Ductile cast iron EN-GJS-400-15; EN-GJS-500-7; EN 1563 / EPDM PN ISO 1629
7	Cap	Ductile cast iron EN-GJS-400-15; EN-GJS-500-7; EN 1563
8	Stem	Stainless steel 1.4021; EN 10088-1
9	Spindle	Stainless steel 1.4021; EN 10088-1
10	Bayonet socket	Ductile cast iron EN-GJS-400-15; EN-GJS-500-7; EN 1563
11	Gasket	Rubber EPDM; EN ISO 1629
12	Outlet gasket	Rubber EPDM; EN ISO 1629
13	Deflektor	Rubber EPDM; EN ISO 1629
14	Gland seal	Brass CW617N; EN 12165
15	Stem nut	Brass CW617N; EN 12165
16	O-ring gasket	Rubber EPDM; EN ISO 1629
17	Screw	Steel Fe/Zn5; Stainless steel A2 EN ISO 4017; EN ISO 4762
18	Nut	Steel Fe/Zn5; Stainless steel A4 EN ISO 4032
19	Ball	Polipropylene EN ISO 1873-1 Rubber EPDM EN ISO 1629
20	Socket	Brass CW617N; EN 12165
21	Dehydrator	Polipropylen PP EN ISO 1873-1

- other material variants on special request

DN	RD	H	H_1	Weight [kg]	
[mm]				8852.1	8852.2
80	1000	915	750	36	37
80	1250	1165	1000	46	45
80	1500	1415	1250	54	53
80	1800	1715	1500	64	-
100	1000	935	750	55	-
100	1250	1185	1000	59	-
100	1500	1435	1250	63	-
100	1800	1735	1500	68	-

We reserve the rights to modify the production program and the given data without separate notices due to the permanent company development

Underground hydrant
double closing

PN16

FIRE PREVENTION

Product description (standard execution):

- Complete drainage after full cut - off the flow
- Kv factor > 75m³/h
- Dehydration time < 15 min.
- Water-traces < 150 ml
- Stand pipe made of galvanized steel
- Stem made of stainless steel pipe
- Stainless steel stem with rolled thread
- EPDM fully vulcanized valve plug
- Replaceable interior elements without closing the gate
- Outlet sealing implemented by pollution deflector
- Kv and dehydration time according to standard
- Initial opening <4 turns; full opening after 13 turns
- MOT 130 Nm
- mST 260 Nm
- Corrosion resistant internal and external parts
- Epoxy coating minimum 250 microns according to EN 14901
- Resistant against disinfectants (suggested solution NaOCl
- Flange connection and connector according to EN 1092-2
- Connection socket with thread 6"coil/inch by GOST 7499-71
- Working pressure PN16
- Product according to EN 1074-1 and 6, GOST 8220-85, PN-EN 14339
- Product marking according to EN 19, EN 1074

Application:

Potable water lines; fire prevention systems temperature range to +50˚C

Test control:

Water pressure test according to EN 1074-1; EN 1074-2; EN 12266-1
Seat: 1,1 x PN
Body: 1,5 x PN
Operation torque test

Accessories:

Street box for hydrant - see: 9502-PEHD-GJL
Hydrant drainage cover - see: 8860

Execution variant:

Interior enamelling

Installation:

In vertical position on horizontal pipelines

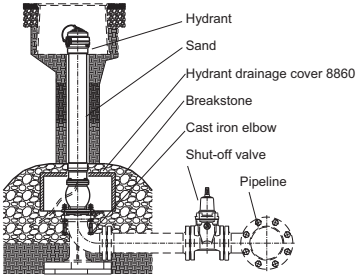

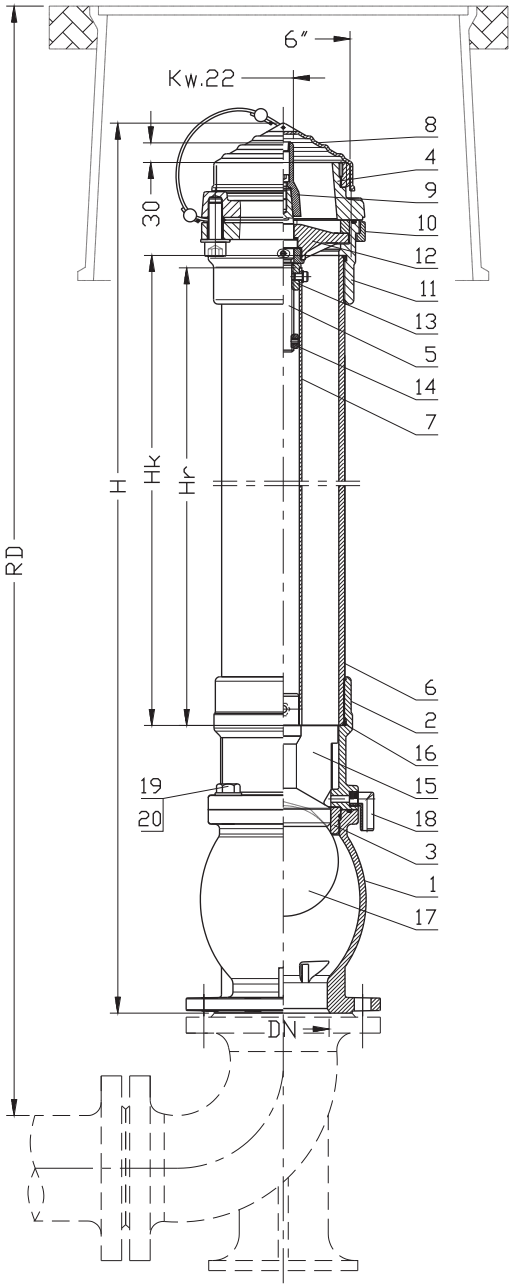

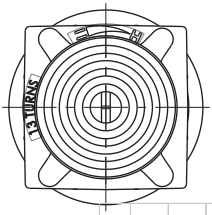

DN	RD	H	H_r	H_k	Weight
		[mm]			[kg]
100	1000	720	254	266	39,6
100	1250	970	504	516	44,6
100	1500	1220	754	766	49,6
100	1750	1470	1004	1016	54,6
100	2000	1720	1254	1266	59,6
100	2250	1970	1504	1516	64,6
100	2500	2220	1754	1766	69,6
100	2750	2470	2004	2016	74,6
100	3000	2720	2254	2266	79,6
100	3250	2970	2504	2516	84,6
100	3500	3220	2754	2766	89,6
100	3750	3470	3004	3016	94,6
100	4000	3720	3254	3266	99,6
100	4250	3970	3504	3516	104,6
100	4500	4220	3754	3766	109,6
100	4750	4470	4004	4016	114,6
100	5000	4720	4254	4266	119,6
100	5250	4970	4504	4516	124,6
100	5500	5220	4754	4766	129,6

No.	Part	Standard execution
1	Ball chamber	Duclite cast iron EN-GJS 400-15, EN-GJS 500-7 EN 1563
2	Head	Duclite cast iron EN-GJS 400-15, EN-GJS 500-7 EN 1563
3	Threaded sleeve	Brass CW217N; EN 12165
4	Threaded flange	Duclite cast iron EN-GJS 400-15, EN-GJS 500-7 EN 1563
5	Stem Tr24x4	Stainless steel 1.4021 EN 10088-1
6	Stand pipe	Steel 1.0037/Zn5 PN-EN 10025-2
7	Spindle	Steel 1.0254, Stainless steel 1.4301 EN 10088-1
8	Pollution deflector	Rubber EPDM ISO 1629
9	Stem cap	Duclite cast iron EN-GJS 400-15, EN-GJS 500-7 EN 1563
10	Rotary flange pressure	Duclite cast iron EN-GJS 400-15, EN-GJS 500-7 EN 1563
11	Rotary flange	Duclite cast iron EN-GJS 400-15, EN-GJS 500-7 EN 1563
12	Stem ensemble	Brass CW217N; EN 12165
13	Nut Tr24x4	Brass CW217N; EN 12165
14	Locknut Tr24x4	Brass CW217N; EN 12165
15	Vulcanized valve plug	Duclite cast iron EN-GJS 400-15, EN-GJS 500-7 /EPDM; EN 1563 / ISO 1629
16	Sealing ring	Rubber EPDM ISO 1629
17	Ball	AISi/EPDM EN 1706/ ISO 1629
18	Dehydrator	Polypropylene PP EN ISO 1873-1
19	Screw	Stainless steel EN ISO 4762
20	Washer	Stainless steel EN ISO 7091

We reserve the rights to modify the production program and the given data without separate notices due to the permanent company development

Underground hydrant

PN16

FIRE PREVENTION

Product description (standard execution):

- Complete drainage after full cut - off the flow
- Kv factor > 75m³/h
- Dehydration time < 15 min.
- Water-traces < 150 ml
- Stand pipe made of galvanized steel
- Stem made of stainless steel pipe
- Stainless steel stem with rolled thread
- EPDM fully vulcanized valve plug
- Replaceable interior elements without closing the gate
- Outlet sealing implemented by pollution deflector
- Kv and dehydration time according to standard
- Initial opening <4 turns; full opening after 13 turns
- MOT 130 Nm
- mST 260 Nm
- Corrosion resistant internal and external parts
- Epoxy coating minimum 250 microns according to EN 14901
- Resistant against disinfectants (suggested solution NaOCl
- Flange connection and connector according to EN 1092-2
- Connection socket with thread 6"coil/inch by GOST 7499-71
- Working pressure PN16
- Product according to EN 1074-1 and 6, GOST 8220-85, PN-EN 14339
- Product marking according to EN 19, EN 1074

Application:

Potable water lines; fire prevention systems temperature range to +50˚C

Test control:

Water pressure test according to EN 1074-1; EN 1074-2; EN 12266-1
Seat: 1,1 x PN
Body: 1,5 x PN
Operation torque test

Accessories:

Street box for hydrant - see: 9502-PEHD-GJL
Hydrant drainage cover - see: 8860

Execution variant:

Interior enamelling

Installation:

In vertical position on horizontal pipelines

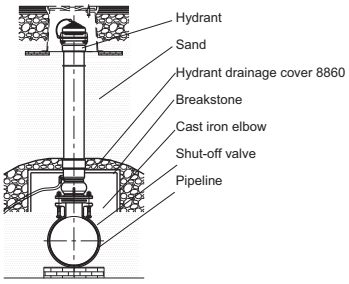

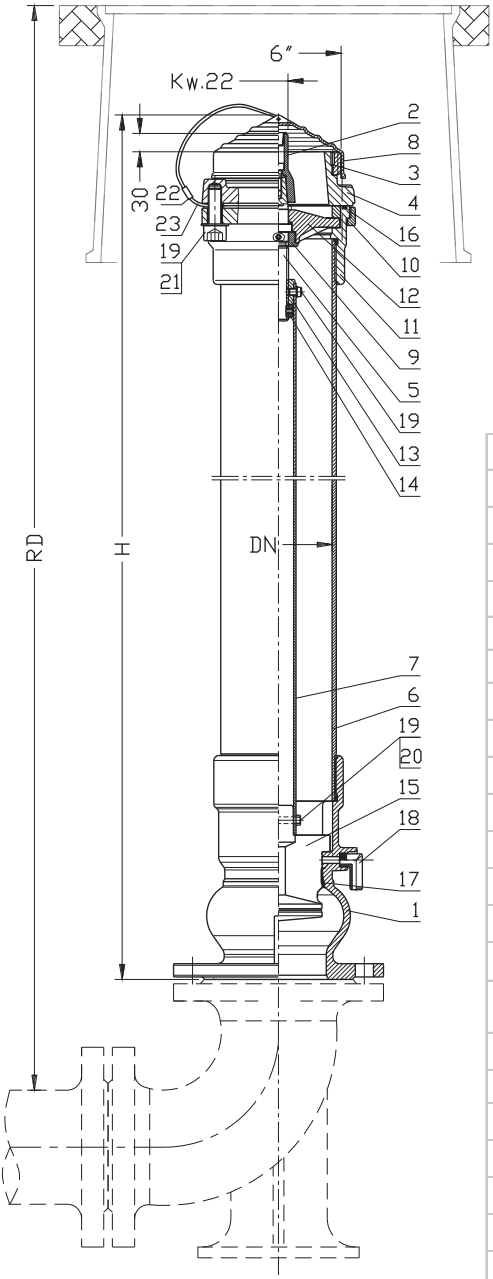

DN	RD	H	Weight
	[mm]		[kg]
100	750	500	32
100	1000	750	37
100	1250	1000	42
100	1500	1250	47
100	1750	1500	52
100	2000	1750	57
100	2250	2000	62
100	2500	2250	67
100	2750	2500	72
100	3000	2750	77
100	3250	3000	82
100	3500	3250	87
100	3750	3500	92
100	4000	3750	97
100	4250	4000	102
100	4500	4250	107
100	4750	4500	112
100	5000	4750	117
100	5250	5000	122
100	5500	5250	127

No.	Part	Standard execution
1	Ball chamber	Duclite cast iron EN-GJS 400-15 EN 1563
2	Head	Duclite cast iron EN-GJS 400-15 EN 1563
3	Threaded sleeve	Brass CW617N EN 12165
4	Threaded flange	Duclite cast iron EN-GJS 400-15 EN 1563
5	Stem Tr24x4	Stainless steel 1.4021 EN 10088-1
6	Stand pipe	Steel 1.0037/Zn5 PN-EN 10025-2
7	Spindle	Stainless steel 1.4301 EN 10088-1
8	Pollution deflector	Rubber EPDM ISO 1629
9	Stem cap	Brass CW617N EN 12165
10	Rotary flange pressure	Duclite cast iron EN-GJS 400-15 EN 1563
11	Rotary flange	Duclite cast iron EN-GJS 400-15 EN 1563
12	Stem ensemble	Brass CW617N EN 12165
13	Nut Tr24x4	Brass CW617N EN 12165
14	Locknut Tr24x4	Brass CW617N EN 12165
15	Vulcanized valve plug	Duclite cast iron EN-GJS 400-15 /EPDM; EN 1563 / ISO 1629
16	Sealing ring	Rubber EPDM ISO 1629
17	Socket	Bronze CuAl7 EN ISO 24373
18	Dehydrator	Polypropylene PP EN ISO 1873-1
19	Screw	Stainless steel EN ISO 4762
20	Nut	Stainless steel EN ISO 4032
21	Washer	Stainless steel EN ISO 7091
22	Clamp	AlMg0.7Si EN 573-3
23	String	Stainless steel Manufacture's catalog

We reserve the rights to modify the production program and the given data without separate notices due to the permanent company development

Pillar type fire hydrant
with stainless steel stand pipe

PN16

FIRE PREVENTION

VERSION

8855.2
DN80

VERSION

8855.2
DN100

Product description (standard execution):

- Complete drainage after cut - off the flow
- Kv factor > 80m³/h - (for 1x75); Kv factor > 140m³/h - (for 2x75); Kv factor > 160m³/h - (for 1x110);
- Dehydration time < 15 min.
- Water-traces < 100 ml (for DN80); < 150 ml (for DN100)
- Rotation head 0˚ to 360˚
- Stainless steel stem with rolled thread
- O-ring stem sealing, packing cork protected against medium
- Forged packing cork protected against unscrewing
- EPDM fully vulcanized valve plug
- Welded brass socket constituting a monolithic body with the bottom body
- Coat of arms place
- Initial opening < 3 turns; full opening after 8 turns
- MOT 80 Nm
- MST 250 Nm
- Corrosion resistant internal and external parts
- Stand pipe made of stainless steel pipe
- UV resistant epoxy coating minimum 250 microns according to EN 14901 GSK RAL certyficate
- Resistant against disinfectants (suggested solution NaOCl)
- Flange connection and connector according to EN 1092-2 (DIN 2501) pressure PN10; PN16
- Outlet connector B 75 according to DIN 14318
- Outlet connector A 110 according to DIN 14319
- Control key according to 89/M – 74088
- Working pressure PN16
- Product according to EN 1074-1; EN 1074-6; EN 14384 TYPE A
- Product marking according to EN 19; EN 1074

Application:

Potable water lines; fire prevention systems temperature range to +50˚C

Test control:

Water pressure test according to EN 1074-1; EN 1074-2; EN 12266-1
Seat: 1,1 xPN
Body: 1,5 x PN
Operation torque test

Accessories:

Hydrant drainage cover - see: 8860

Installation:

In vertical position on horizontal pipelines

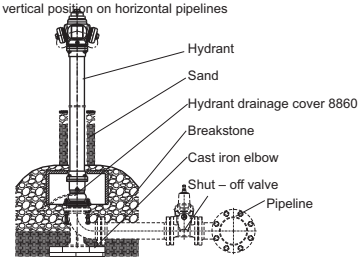

DN80

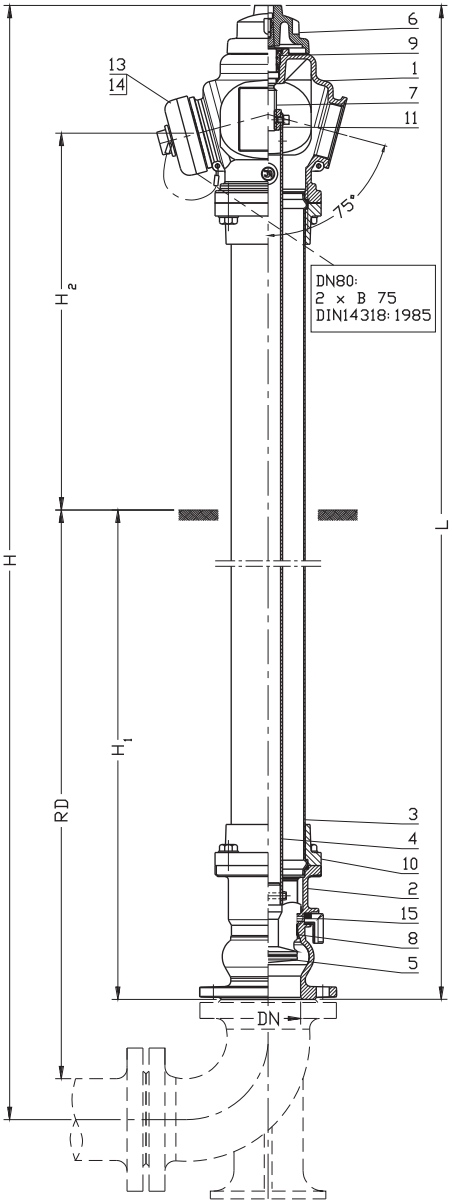

DN100

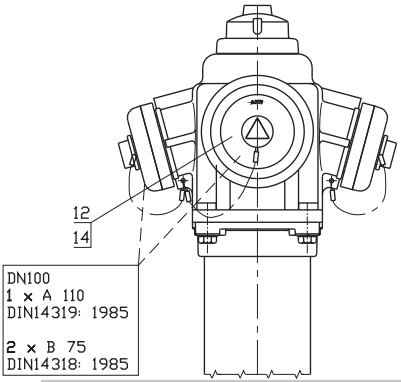

DN	RD	L	H	H_1	H_2	Weight
[mm]						[kg]
80	1000	1640	1805	880	565	46
80	1250	1890	2055	1130	565	47
80	1500	2140	2305	1380	565	49
80	1800	2440	2605	1680	565	53
100	1000	1650	1830	880	565	60
100	1250	1900	2080	1130	565	64
100	1500	2150	2330	1380	565	68
100	1800	2450	2630	1680	565	72

No.	Part	Standard execution
1	Head	Ductile cast iron EN-GJS-400-15; EN-GJS-500-7; EN 1563
2	Bottom body	
3	Stand pipe	Stainless steel 1.4301; EN 10088-1 EN 1503-1
4	Spindle	Steel 1.0037; EN 10025-2; Stainless steel 1.4301; EN 10088-1
5	Valve plug	Ductile cast iron EN-GJS-400-15 / EPDM; EN 1563 / EN ISO 1629
6	Cap	Aluminium AlSi EN 1706
7	Stem	Stainless steel 1.4021 EN 10088-1
8	Socket	Bronze CuAl7 EN-ISO 24373
9	Gland seal	Brass CW617N EN 12165
10	Flange	Ductile cast iron EN-GJS 400-15; EN-GJS 500-7; EN 1563
11	Stem nut	Brass CW617N EN 12165
12	Outlet connector A	Aluminium AlSi EN 1706
13	Outlet connector B	Aluminium AlSi EN 1706
14	Outlet connector cover	Aluminium AlSi EN 1706
15	Dehydrator	Polipropylene PP EN ISO 1873-1

We reserve the rights to modify the production program and the given data without separate notices due to the permanent company development

Pillar type fire hydrant
single closing

PN16

FIRE PREVENTION

VERSION

8855.4 DN80

Product description (standard execution):

- Complete drainage after cut - off the flow
- Kv factor > 80m³/h - (for 1x75); Kv factor > 140m³/h - (for 2x75); Kv factor > 160m³/h - (for 1x110);
- Dehydration time < 15 min.
- Water-traces < 100 ml (for DN80); < 150 ml (for DN100)
- Stainless steel stem with rolled thread
- O-ring stem sealing, packing cork protected against medium
- Forged packing cork protected against unscrewing
- EPDM fully vulcanized valve plug
- Welded brass socket constituting a monolithic body with the bottom body, resistant to scratches and surface damage
- Coat of arms place
- Initial opening < 3 turns; full opening after 8 turns
- MOT 80 Nm
- MST 250 Nm
- Corrosion resistant internal and external parts
- Stand pipe made of ductile cast iron pipe (coated with zinc)
- UV resistant epoxy coating minimum 250 microns according to EN 14901
- Resistant against disinfectants (suggested solution NaOCl)
- Flange connection and connector according to EN 1092-2 (DIN 2501) pressure PN10; PN16
- Outlet connector B 75 according to DIN 14318
- Outlet connector A 110 according to DIN 14319
- Control key according to PN-89/M – 74088
- Working pressure PN16
- Product according to EN 1074-1; EN 1074-6; EN 14384 TYPE A
- Product marking according to EN 19; EN 1074

Application:

Potable water lines; fire prevention systems temperature range to +50˚C

Test control:

Water pressure test according to EN 1074-1; EN 1074-2; EN 12266-1
Seat: 1,1 xPN
Body: 1,5 x PN
Operation torque test

Accessories:

Hydrant drainage cover - see: 8860

Installation:

In vertical position on horizontal pipelines

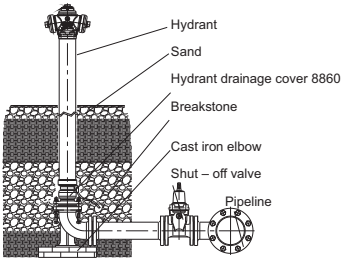

DN80

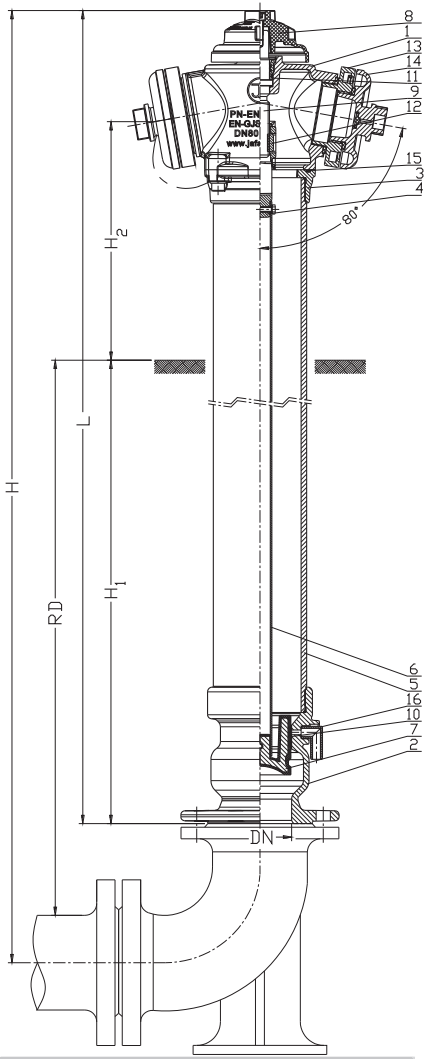

DN100

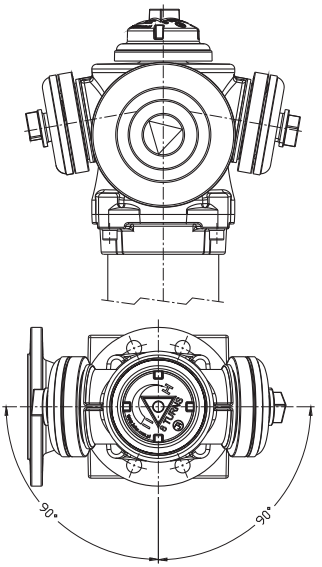

DN	RD	L	H	H_1	H_2	Weight
[mm]						[kg]
80	1000	1640	1805	880	565	48
80	1250	1890	2055	1130	565	53
80	1500	2140	2305	1380	565	59
80	1800	2440	2605	1680	565	66
100	1000	1650	1830	880	565	54
100	1250	1900	2080	1130	565	59
100	1500	2150	2330	1380	565	64
100	1800	2450	2630	1680	565	70

No.	Part	Standard execution
1	Head	Ductile cast iron EN-GJS 400-15; EN-GJS 500-7; EN 1563
2	Ball chamber	Ductile cast iron EN-GJS 400-15; EN-GJS 500-7; EN 1563
3	Column flange	Ductile cast iron EN-GJS 400-15; EN-GJS 500-7; EN 1563
4	Cover nut	Ductile cast iron EN-GJS 400-15; EN-GJS 500-7; EN 1563
5	Stand pipe	Ductile cast iron EN-GJS 400-15; EN-GJS 500-7; EN1563 Steel 1.0037, EN 10025-2 Stainless steel 1.4301, EN 10088-1 EN 1503-1
6	Spindle	Steel 1.0037, EN 10025-2 Stainless steel 1.4301, EN 10088-1
7	Valveplug	Ductile cast iron EN-GJS 400-15/ EPDM;EN 1563 ISO 1629
8	Cap	Aluminium AlSi EN 1706
9	Stem	Stainless steel 1.4021 EN 10088-1
10	Socket	Bronze CuAl7 EN-ISO 24373
11	Gland seal	BrassCW617N EN 12165
12	Stem nut	BrassCW617N EN 12165
13	Outlet connector B	Aluminium AlSi EN 1706
14	Outlet connector cover	Aluminium AlSi EN 1706
15	O-ring	Rubber EPDM ISO 1629
16	Dehydrator	Polipropylene PP EN ISO 1873-1

We reserve the rights to modify the production program and the given data without separate notices due to the permanent company development

Pillar type fire hydrant
single closing

PN16

FIRE PREVENTION

Product description (standard execution):

- Complete drainage after cut - off the flow
- Kv factor > 140m³/h - (for 2x75); Kv factor > 280m³/h - (for 2x110);
- Dehydration time < 15 min.
- Water-traces < 200 ml (for DN150)
- Stainless steel stem with rolled thread
- O-ring stem sealing, packing cork protected against medium
- Forged packing cork protected against unscrewing
- EPDM fully vulcanized valve plug
- Welded brass socket constituting a monolithic body with the bottom body
- Coat of arms place
- Initial opening < 3 turns; full opening after 8 turns
- MOT 80 Nm
- MST 250 Nm
- Corrosion resistant internal and external parts
- Stand pipe made of ductile cast iron pipe (coated with zinc)
- UV resistant epoxy coating minimum 250 microns according to EN 14901
- Resistant against disinfectants (suggested solution NaOCl)
- Flange connection and connector according to EN 1092-2 (DIN 2501) pressure PN10; PN16
- Outlet connector B 75 according to DIN 14318
- Outlet connector A 110 according to DIN 14319
- Control key according to 89/M – 74088
- Working pressure PN16
- Product according to EN 1074-1; EN 1074-6; EN 14384 TYPE A
- Product marking according to EN 19; EN 1074

Application:

Potable water lines; fire prevention systems temperature range to +50˚C

Test control:

Water pressure test according to EN 1074-1; EN 1074-2; EN 12266-1
Seat: 1,1 xPN
Body: 1,5 x PN
Operation torque test

Accessories:

Hydrant drainage cover - see: 8860

Installation:

In vertical position on horizontal pipelines

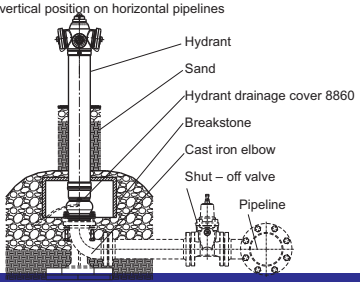

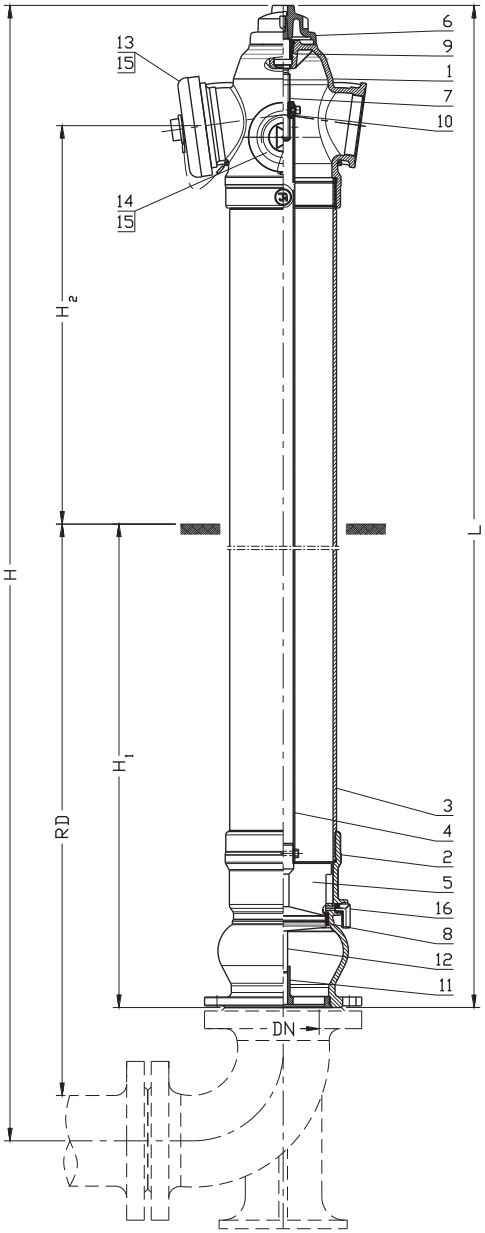

DN	RD	L	H	H_1	H_2	Weight
[mm]						[kg]
150	1250	1971	2191	1115	640	95
150	1500	2221	2441	1365	640	103
150	1800	2521	2741	1665	640	111

No.	Part	Standard execution
1	Head	Ductile cast iron EN-GJS 400-15 EN 1563
2	Bottom body	Ductile cast iron EN-GJS 400-15 EN 1563
3	Stand pipe	Ductile cast iron EN-GJS 400-15; EN 1563; Steel 1.0037; EN 10025-2 Stainless steel 1.4301; EN10088-1 EN 1503-1;
4	Spindle	Stainless steel 1.4301 EN 10088-1
5	Valve plug	Ductile cast iron EN-GJS 400-15 / EPDM EN 1563 / EN-ISO 1629
6	Cap	Aluminium AlSi EN 1706
7	Stem	Stainless steel 1.4021 EN 10088-1
8	Socket	Bronze CuAl7 EN-ISO 24373
9	Gland seal	Brass CW617N EN 12165
10	Stem nut	Brass CW617N EN 12165
11	Slideway	Stainless steel 1.4021 EN 10088-1
12	Pin	Brass CW617N EN 12165
13	Outlet connector A	Aluminium AlSi EN 1706
14	Outlet connector B	Aluminium AlSi EN 1706
15	Outlet connector cover	Aluminium AlSi EN 1706
16	Dehydrator	Polipropylene PP EN ISO 1873-1

We reserve the rights to modify the production program and the given data without separate notices due to the permanent company development

Hydrant drainage cover

FIRE PREVENTION

WATER

Product description (standard execution):

- Body made of plastic
- External protection - geotextile

Application:

To prevent hydrant drainage against choking and ground outwashing around hydrant.

Assembling:

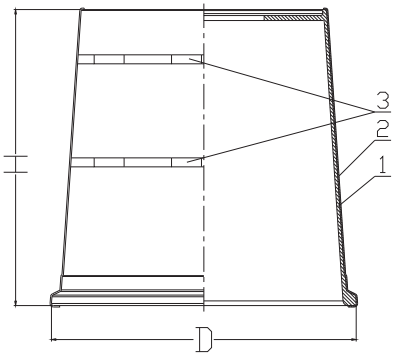

DN	H	D	Weight	Index
	[mm]		[kg]	
80	350	305	1	8860-080-PEHD
100	350	305	1	8860-080-PEHD

No.	Part	Standard execution
1	Cover body	PEHD EN ISO 17855-1
2	Geotextile	Polipropylene EN ISO 19069-1
3	Band clip	Nylon

We reserve the rights to modify the production program and the given data without separate notices due to the permanent company development

Service valve
outlet connector

PN16

FIRE PREVENTION

DN 50

DN 200

Product description (standard execution):

- Socket C52 according to DIN 14317
- UV resistant epoxy coating minimum 250 microns according to EN 14901
- Body and hydrant socket – aluminium cast Ak11
- Hydrant valve AlSi EN 1706
- Flange connection according to EN 1092-2 (DIN 2501), pressure PN10 PN16
- Product marking according to EN 19; EN 1074

Application:

For cleaning and revision operations in water line networks, sewage systems, Suitable for various water/inert fluid lines (NBR) and potable water (EPDM). Working media temperature up to +70˚C

Test control:

Water pressure test according to EN 1074-1; EN 1074-2; EN 12266-1
Seat: 1,1 xPN
Body: 1,5 x PN

Accessories:

Drain plug

Installation:

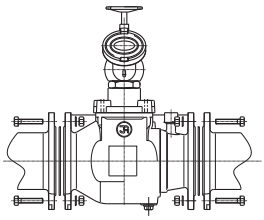

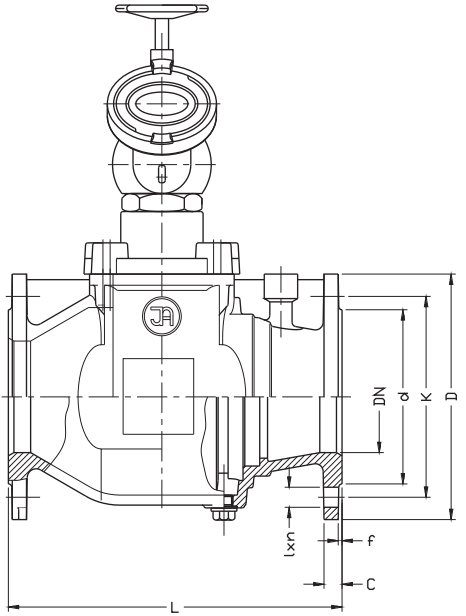

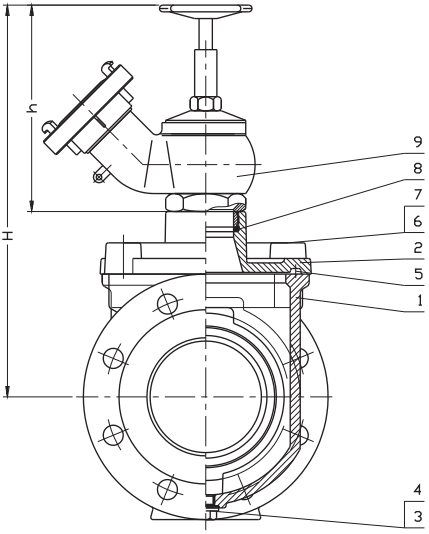

DN	L	D	K PN16 (PN10)	d	h	H	L x n PN16 (PN10)	Weight
[mm]								[kg]
50	200	165	125	102	185	307	18x4	11
80	260	200	160	138	185	329	18x8(4)	18
100	300	220	180	158	185	351	18x8	22,5
150	400	285	240	212	185	384	22x8	38,5
200	500	340	295	268	185	420	22x12(8)	57,8
250	700	405	355 (350)	320	185	390	26(22)x12	106

No.	Part	Standard execution
1	Body	Grey iron Ductile cast iron EN-GJL-250; EN 1561 EN-GJS 400-15; EN 1563
2	Bonnet	Grey iron Ductile cast iron EN-GJL-250; EN 1561 EN-GJS 400-15; EN 1563
3	Drain plug	Brass CW617N EN 12165
4	Washout hole gasket	Producer catalogue
5	Bonnet gasket	Rubber EPDM / NBR EN ISO 1629
6	Screw	Steel Fe/Zn5 Stainless steel EN ISO 4762
7	Screw stopper	Wax
8	Valve gasket	Rubber EPDM / NBR EN ISO 1629
9	Hydrant valve	AlSi EN 1706 Stainless steel 1.4401 EN 10088-2

- other material variants on special request

We reserve the rights to modify the production program and the given data without separate notices due to the permanent company development

Hydrant drainage cover	PN16	WATER	FIRE PREVENTION	SEWAGE

Product description (standard execution):

- Complete drainage after cut - off the flow
- Plate valve made of stainless steel 1.4310
- Initial opening < 6 turns; full opening after 16 turns
- MOT 105 Nm
- MST 210 Nm
- Corrosion resistant internal and external parts
- Epoxy coating minimum 250 microns according to EN 14901
- Resistant against disinfectants (suggested solution NaOCl)
- Flange connection and connector according to EN 1092-2 (DIN 2501) pressure PN10; PN16
- Outlet connector 1xB 75 according to DIN 14318
- Working pressure PN16
- Product according to EN 1074-1; EN 1074-6; EN 14339
- Product marking according to EN 19; EN 1074

Application:

Potable water lines, fire prevention systems and sewage for monitoring cleaning and up take water in temperature range to +50˚C

Test control:

Water pressure test according to EN 1074-1; EN 1074-2; EN 12266-1
Seat: 1,1 xPN
Body: 1,5 x PN
Operation torque test

Accessories:

Street box - see: 9502-PEHD-GJL

Installation:

In vertical position on horizontal pipelines

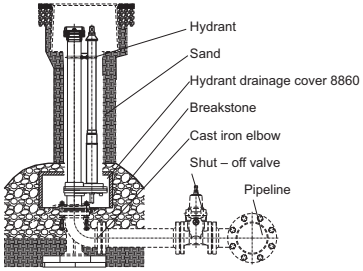

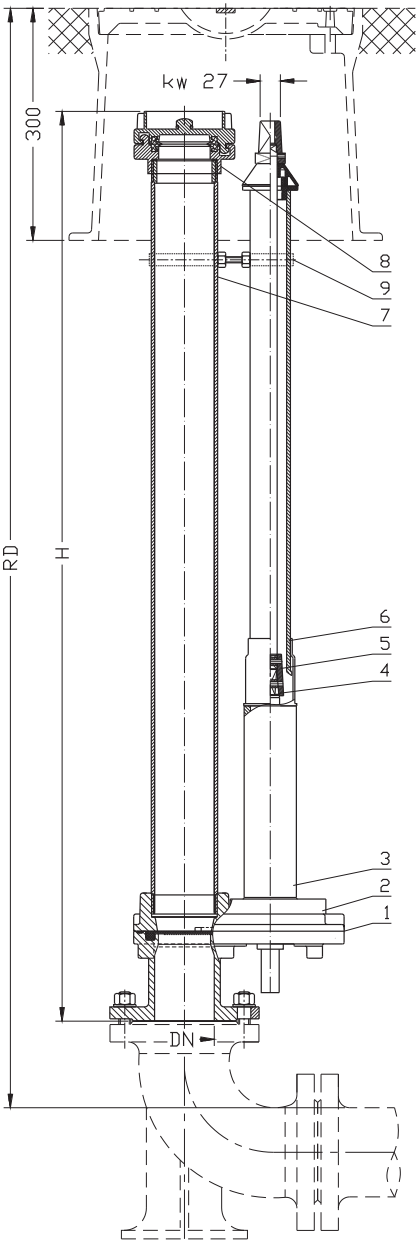

DN	RD	H	Weight
[mm]			[kg]
50	1000	750	47
50	1250	1000	49
50	1500	1250	51
50	2000	1750	54
80	1000	750	48
80	1250	1000	50
80	1500	1250	52
80	2000	1750	55

No.	Part	Standard execution
1	Body	Ductile cast iron EN-GJS 400-15 EN 1563
2	Bonnet	Ductile cast iron EN-GJS 400-15 EN 1563
3	Gear	Ductile cast iron EN-GJS 400-15 EN 1563 Stainless steel 1.4021; EN 10088-1 Brass CW617N; EN 1982
4	Stem	Stainless steel 1.4301 EN 10088-1
5	Coupling	Ductile cast iron EN-GJS 400-15/ EPDM / NBR / EN 1563 / EN-ISO 1629
6	Plastic protection pipe	Producer calatogue TYP 9010 (Spindle extension)
7	Stand pipe	Steel 1.0037; EN 10025-2 Stainless steel 1.4301; EN 10088-1
8	Outlet connector	Aluminium AlSi; EN 1706
9	Handle	Steel 1.0037; EN 10025-2 EPDM; EN-ISO 1629

We reserve the rights to modify the production program and the given data without separate notices due to the permanent company development

Opening indicator

PN10
PN16

WATER | SEWAGE | GAS

Type 9001

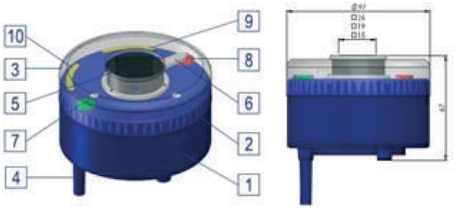

INDEX	The size of the square of the indicator	Turn for open	Weight	Selection of the indicator for the housing in relation to the connection square
	[mm]		[kg]	
TH-9001-0019-0081	19	81	0,2	9006/9007/9010/9011 sq.12, 14, 17, 19
TH-9001-0026-0081	26	81	0,2	9006/9007/9010/9011 sq.24, 27, 32, 36
*other square sizes are possible				

Type 9002

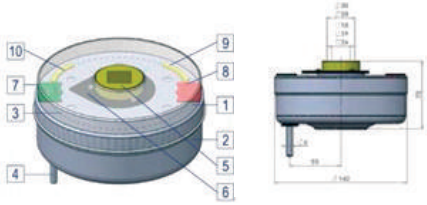

INDEX	The size of the square of the indicator	Turn for open	Weight	Selection of the indicator for the housing in relation to the connection square
	[mm]		[kg]	
TH-9002-0019-0470	19	470	1,7	9006/9007/9010/9011 sq.12, 14, 17, 19
TH-9002-0026-0470	26	470	1,7	9006/9007/9010/9011 sq.24, 27, 32, 36
TH-9002-0019-1390	19	1390	1,7	9006/9007/9010/9011 sq.12, 14, 17, 19
TH-9002-0026-1390	26	1390	1,7	9006/9007/9010/9011 sq.24, 27, 32, 36
* other square sizes are possible				

Product description (standard execution):

- The indicator is made completely of plastic
- Graphic designation of the position of the indicator by fixing marks

		9001	9002
No	Part	Standard execution	
1	Protective cover	PE	PE
2	Body		AlSi
3	Position of the openings		
4	Fixing pin		1,4301
5	Square of embedding		ZnAl4
6	Indication		1,4301
7	Sign position	PA	
8			
9	Direction arrows	PE	
10			

Application:

Indicator intended for use on fixed or telescopic enclosures as an element determining the position of the valve closing assembly.

Product description (standard execution):

- Indicator body made of aluminum
- Graphical indication of the location of the pointer by fixing marks
- Waterproof

Installation:

In order to assemble the indicator on the housing:
- pull off the extension spindle cap
- shorten the casing cover pipe by the height of the indicator
- make a hole in the extension spindle cover for the index indicator pin (4)

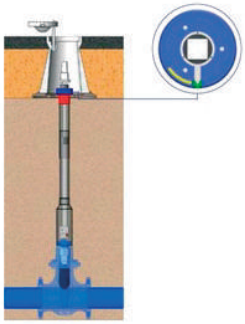

We reserve the rights to modify the production program and the given data without separate notices due to the permanent company development

Extension spindle
rigid

PN10
PN16

SEWAGE

WATER

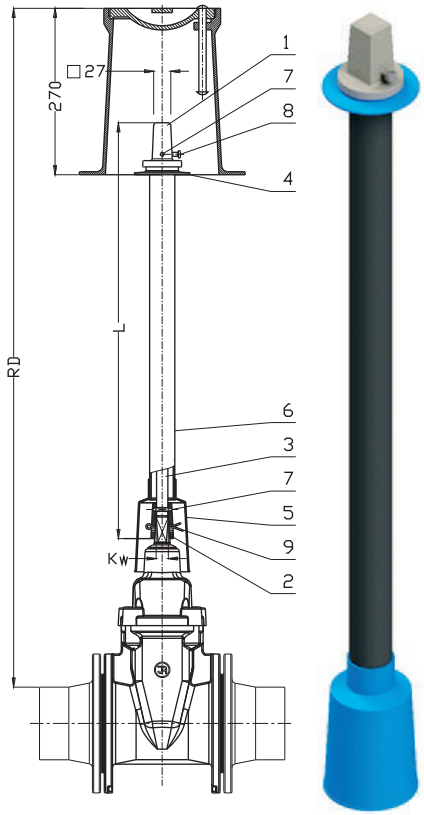

No.	Part	Standard execution
1	Cap	Ductile cast iron EN-GJS 400-15 EN 1563
2	Coupling	Ductile cast iron EN-GJS-400-15 EN 1563
3	Spindle	Galvanized steel Steel Fe/Zn5 EN 10025-2
4	Collar	Polyethylene PE EN ISO 17855-1
5	Pipe bell	Polyethylene PE EN ISO 17855-1
6	Casing liner	Polyethylene PE EN ISO 17855-1
7	Spring pin	Steel 60G; Stainless steel EN ISO 8752
8	Screw	Steel Fe/Zn5 EN ISO 4017
9	Split cotter	Steel Fe/Zn5 EN ISO 1234

TYP 9010		L [mm] / Weight [kg]					
DN	K_w	RD 750	RD 1000	RD 1250	RD 1500	RD 2000	RD 2500
25	12	437 1,8	687 2,5	937 3,1	1187 3,8	1687 5,1	2187 6,5
32	12	459 1,9	709 2,6	959 3,2	1209 3,8	1709 5,2	2209 6,6
40	14	392 1,7	642 2,4	892 3,0	1142 3,6	1642 5,0	2142 6,4
50	14	387 1,7	637 2,4	887 3,0	1137 3,6	1637 5,0	2137 6,4
65	17	366 1,6	616 2,3	866 3,0	1116 3,7	1616 5,1	2116 6,5
80	17	348 1,5	598 2,2	848 2,9	1098 3,6	1598 5,0	2098 6,4
100	19	323 1,5	573 2,2	823 2,9	1073 3,6	1573 5,0	2073 6,4
125	19	296 1,4	546 2,1	796 2,8	1046 3,5	1546 4,9	2046 6,3
150	19	-	467 1,9	717 2,6	967 3,3	1467 4,7	1967 6,1
200	24	-	447 2,6	697 3,4	947 4,2	1447 5,9	1947 7,6
250	27	-	374 2,3	624 3,1	874 4,0	1374 5,7	1874 7,4
300	27	-	325 2,1	575 2,9	825 3,8	1325 5,5	1825 7,2
350	27	-	268 1,9	518 2,7	768 3,6	1268 5,3	1768 7,0
400	32	-	-	332 3,2	582 4,5	1082 7,1	1582 9,8
500	36	-	-	-	427 3,8	927 6,4	1427 9,1
600	36	-	-	-	308 3,1	808 5,8	1308 8,4

Product description (standard execution):

- The possibility of shortening the mounting surface area
- Cap made of ductile cast iron EN-GJS 400-15
- Galvanized steel square section 18mm
- Ductile cast iron EN-GJS-400-15 coupling mounted on the valve spindle with the split cotter
- Extension spindle liner cap pipe bell and thrust washer made of PE
- Pipe bell protects against dirt penetration from the ground

Application:

Simple and rigid extension of the valve spindle.
Underground mounted Armature operating.

Accessories:

With pillar handwheel see: 9113
With pillar for electric actuator see: 9114
With T-key see: 9015
With street box see: 9501; 9502; 9503; 9504; 9509

We reserve the rights to modify the production program and the given data without separate notices due to the permanent company development

Telescopic extension spindle

PN10
PN16

SEWAGE

WATER

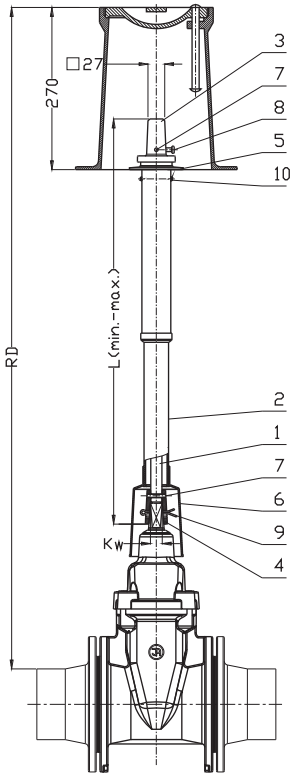

No.	Part	Standard execution
1	Spindle	Galvanized steel Steel Fe/Zn5 EN 10025-2
2	Casing liner	Polyethylene PE EN ISO 17855-1
3	Cap	Ductile cast iron EN-GJS 400-15 EN 1563
4	Coupling	Ductile cast iron EN-GJS 400-15 EN 1563
5	Collar	Polyethylene PE EN ISO 17855-1
6	Pipe bell	Polyethylene PE EN ISO 17855-1
7	Spring pin	Steel Fe/Zn5 EN ISO 8752
8	Screw	Steel Fe/Zn5 EN ISO 4017
9	Split cotter	Steel Fe/Zn5 EN ISO 1234
10	Screw	Steel Fe/Zn5 EN ISO 7049

TYP 9011		RD 600-900	RD 900-1300	RD 1300-1800	RD 2000-2500	RD 2500-3100
DN	Kw	$L_{(min)}$ $L_{(max)}$ [mm]	$L_{(min)}$ $L_{(max)}$ [mm]	$L_{(min)}$ $L_{(max)}$ [mm]	$L_{(min)}$ $L_{(max)}$ [mm]	$L_{(min)}$ $L_{(max)}$ [mm]
		Weight [kg]	Weight [kg]	Weight [kg]	Weight [kg]	Weight [kg]
25	12	RD 750-925 436 611 2,2	RD 925-1300 611 986 3,1	986 1486 4,1	1686 2186 5,3	2237 2837 13,0
32	12	RD 725-925 433 633 2,3	RD 925-1300 633 1008 3,2	1008 1508 4,1	1708 2208 5,3	2259 2859 13,0
40	14	RD 775-950 416 591 2,2	RD 950-1300 591 941 3,0	941 1441 4,0	1641 2141 5,2	2198 2798 13,1
50	14	RD 775-950 411 586 2,2	RD 950-1300 586 936 3,0	936 1436 4,0	1636 2136 5,2	2193 2793 13,1
65	17	-	RD 975-1300 590 915 2,9	915 1415 4,0	1615 2115 5,2	2166 2766 13,0
80	17	-	RD 975-1300 572 897 2,9	897 1397 4,0	1597 2097 5,1	2148 2748 12,9
100	19	-	RD 1000-1300 572 872 2,8	872 1372 3,9	1572 2072 5,1	2123 2723 12,8
125	19	-	RD 1000-1300 545 845 2,8	845 1345 3,9	1545 2045 5,0	2096 2696 12,7
150	19	-	RD 1050-1300 516 766 2,6	766 1266 3,7	1466 1966 4,9	2017 2617 12,4
200	24	-	RD 1075-1325 501 751 2,90	RD 1325-1800 751 1226 4,0	1426 1926 5,1	1965 2565 12,3
250	27	-	RD 1125-1350 478 703 2,80	RD 1350-1800 703 1153 3,9	1353 1853 5,1	1892 2492 12,1
300	27	-	RD 1175-1375 479 679 2,7	RD 1375-1800 679 1104 3,7	1304 1804 5,0	1843 2443 12,0
350	27	-	RD 1200-1400 447 647 2,7	RD 1400-1800 647 1047 3,6	1247 1747 4,9	1786 2386 11,8
400	32	-	-	RD 1525-1800 607 882 6,0	1082 1582 8,9	1582 2182 11,2
500	36	-	-	RD 1600-1800 527 727 5,4	927 1427 8,5	1427 2027 10,8
600	36	-	-	RD 1650-1800 458 608 4,8	808 1308 8,1	1308 1908 10,4

Product description (standard execution):

- Spindle secured against tearing, the ability to adapt to the terrain in the given range
- Cap made of ductile cast iron EN-GJS-400-15
- The spindle tightly fitted into the square profile
- The coupling of ductile iron EN-GJS-400-15 mounted on the valve stem with the split cotter
- Casing liner cup pipe bell and thrust washer made of PE
- Pipe bell protects against pollution from the ground
- Height adjuster for setting casing at any height

Application:

Flexible and safe extension of the valve stem. Underground mounted

Accessories:

With pillar handwheel see: 9113
With pillar for electric actuator see: 9114
With T-key see: 9015
With street box see: 9501; 9502; 9503; 9504; 9509

We reserve the rights to modify the production program and the given data without separate notices due to the permanent company development

Fixed extension spindle rigid with opening indicator

PN10
PN16

WATER | SEWAGE | GAS

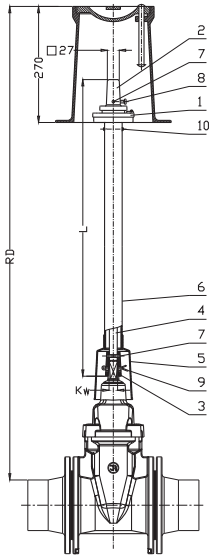

No	Part	Standard execution	No	Part	Standard execution
1	Opening indicator	Poly ethy lene PE EN ISO 17855-1	6	Casing liner	Poly ethy lene PE EN ISO 17855-1
2	Cap	Ductile cas iron EN-GJS-400-15 EN 1563	7	Spring pin	Steel Fe/Zn5 EN ISO 8752
3	Coupling	Ductile cas iron EN-GJS-400-15 EN 1563	8	Screw	Steel Fe/Zn5 EN ISO 4017
4	Rod	Steel Fe/Zn5 EN 10025-2	9	Split cotter	Steel Fe/Zn5 EN ISO 1234
5	Pipe bell	Poly ethy lene PE EN ISO 17855-1	10	Screw	Steel Fe/Zn5 EN ISO 7049

TYP 9020		L [mm] / W eight [kg]					
DN	Kw	RD 750	RD 1000	RD 1250	RD 1500	RD 2000	RD 2500
Spotter	12	356	606	856	1106	1606	2106
		1,7	2,4	3,0	3,7	5,1	6,4
25	12	458	708	958	1208	1708	2208
		2,0	2,7	3,3	4,0	5,3	6,7
32	12	480	730	980	1230	1730	2230
		2,1	2,8	3,4	4,0	5,4	6,8
40	14	413	663	913	1163	1663	2163
		1,9	2,6	3,2	3,8	5,2	6,6
50	14	408	658	908	1158	1658	2158
		1,9	2,6	3,2	3,8	5,2	6,6
65	17	387	637	887	1137	1637	2137
		1,8	2,5	3,2	3,9	5,3	6,7
80	17	369	619	869	1119	1619	2119
		1,7	2,4	3,1	3,8	5,2	6,6
100	19	344	594	844	1094	1594	2094
		1,7	2,4	3,1	3,8	5,2	6,6
125	19	317	567	817	1067	1567	2067
		1,6	2,3	3,0	3,7	5,1	6,5
150	19	-	488	738	988	1488	1988
			2,1	2,8	3,5	4,9	6,3
200	24	-	473	723	973	1473	1973
			2,8	3,6	4,4	6,1	7,8
250	27	-	400	650	900	1400	1900
			2,5	3,3	4,2	5,9	7,6
300	27	-	351	601	851	1351	1851
			2,3	3,1	4,0	5,7	7,4
350	27	-	294	544	794	1294	1794
			2,1	2,9	3,8	5,5	7,2
400	32	-	-	359	609	1109	1609
				3,4	4,7	7,3	10,0
500	36	-	-	-	454	954	1454
					4,0	6,6	9,3
600	36	-	-	-	335	835	1335
					3,3	6,0	8,6

Product description (standard execution):

- The possibility of shortening the mounting surface area
- Cap made of ductile cast iron EN-GJS-400-15
- The spindle tightly fitted into the square profile
- The coupling of ductile iron EN-GJS-400-15
- Mounted on the valve stem with the split cotter
- Indicator body entirely made of PE polyethylene
- Graphical indication of the position of the indicator by fixing marks
- Casing liner cup pipe bell and thrust washer made of PE
- Pipe bell protects against pollution from the ground
- All parts of the indicator are made of non-corrosive elements
- Maximum speed: for dimensions up to DN200 - 49 turns
  above DN200 - 121 turns

Application:

Opening indicator as an element determining the position of the valve closing assembly
Flexible and safe extension of the valve stem. Underground mounted

Accessories:

With pillar for electric actuator see: 9114
With T-key see: 9015
With street box see: 9501; 9502; 9503; 9504; 9505, 9506, 9507, 9508, 9509, 9514

Installation:

Setting the indicator:
1. Open the valve to the maximum, then screw in the "O" sign so that it coincides with the needle.

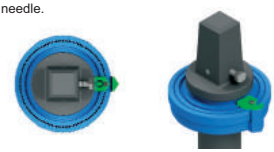

2. Close the valve as much as possible, then screw in the "C" sign so that it coincides with the needle.

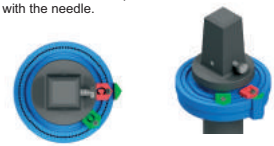

We reserve the rights to modify the production program and the given data without separate notices due to the permanent company development

Telescopic extension spindle with an opening indicator

PN10
PN16

WATER | SEWAGE | GAS

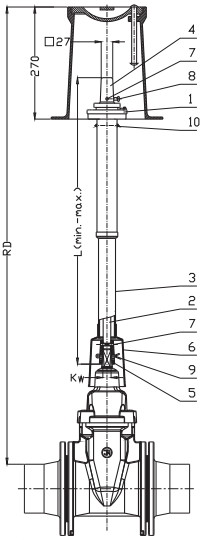

No	Part	Standard execution	No	Part	Standard execution
1	Opening indicator	Polyethylene PE EN ISO 17855-1	6	Cup	Polyethylene PE EN ISO 17855-1
2	Spindle	Steel Fe/Zn5 EN 10025-2	7	Spring pin	Steel Fe/Zn5 EN ISO 8752
3	Casing liner	Polyethylene PE EN ISO 17855-1	8	Screw	Steel Fe/Zn5 EN ISO 4017
4	Cap	Ductile cas iron EN-GJS-400-15 EN 1563	9	Split cotter	Steel Fe/Zn5 EN ISO 1234
5	Coupling	Ductile cas iron EN-GJS-400-15 EN 1563	10	Screw	Steel Fe/Zn5 EN ISO 7049

TYP 9021		RD 600-900		RD 900-1300		RD 1300-1800		RD 2000-2500		RD 2500-3100	
DN	Kw	L_{min}	L_{max}	L_{min}	L_{max}	L_{min}	L_{max}	L_{min}	L_{max}	L_{min}	L_{max}
		[mm]		[mm]		[mm]		[mm]		[mm]	
		Weight [kg]		Weight [kg]		Weight[kg]		Weight [kg]		Weight [kg]	
Spotter	12	RD 825-975		RD 975-1300							
		430	580	580	905	905	1405	1605	2105	2161	2761
		2,3		3,1		4,1		5,3		12,8	
25	12	RD 750-925		RD 925-1300							
		457	632	632	1007	1007	1507	1707	2207	2263	2863
		2,4		3,3		4,3		5,5		13,2	
32	12	RD 725-925		RD 925-1300							
		454	654	654	1029	1029	1529	1729	2229	2285	2885
		2,5		3,4		4,3		5,5		13,2	
40	14	RD 775-950		RD 950-1300							
		437	612	612	962	962	1462	1662	2162	2224	2824
		2,4		3,2		4,2		5,4		13,3	
50	14	RD 775-950		RD 950-1300							
		432	607	607	957	957	1457	1657	2157	2219	2819
		2,4		3,2		4,2		5,4		13,3	
65	17	-		RD 975-1300							
				611	936	936	1436	1636	2136	2192	2792
				3,1		4,2		5,4		13,2	
80	17	-		RD 975-1300							
				593	918	918	1418	1618	2118	2174	2774
				3,1		4,2		5,3		13,1	
100	19	-		RD 1000-1300							
				593	893	893	1393	1593	2093	2149	2749
				3,0		4,1		5,3		13,0	
125	19	-		RD 1000-1300							
				566	866	866	1366	1566	2066	2122	2722
				3,0		4,1		5,2		12,9	
150	19	-		RD 1050-1300							
				537	787	787	1287	1487	1987	2043	2643
				2,8		3,9		5,1		12,6	
200	24	-		RD 1075-1325		RD 1325-1800					
				522	772	772	1247	1447	1947	1991	2591
				3,1		4,2		5,3		12,5	
250	27	-		RD 1125-1350		RD 1350-1800					
				499	724	724	1174	1374	1874	1918	2518
				3,0		4,1		5,3		12,3	
300	27	-		RD 1175-1375		RD 1375-1800					
				500	700	700	1125	1325	1825	1869	2469
				2,9		3,9		5,2		12,2	
350	27	-		RD 1200-1400		RD 1400-1800					
				468	668	668	1068	1268	1768	1812	2412
				2,9		3,8		5,1		12,0	
400	32	-		-		RD 1525-1800					
						633	908	1108	1608	1608	2208
						6,2		9,1		11,4	
500	36	-		-		RD 1600-1800					
						553	753	953	1453	1453	2053
						5,6		8,7		11,0	
600	36	-		-		RD 1650-1800					
						484	634	834	1334	1334	1934
						5,0		8,3		10,6	

Product description (standard execution):

- Spindle secured against tearing, the ability to fit the area within the specified range
- The spindle rod is tightly matched to the square profile (profile rod and galvanized)
- The possibility of shortening the mounting surface area
- Cap made of ductile cast iron EN-GJS-400-15
- The spindle tightly fitted into the square profile
- The coupling of ductile iron EN-GJS-400-15
- Mounted on the valve stem with the split cotter
- Indicator body entirely made of PE polyethylene
- Graphical indication of the position of the indicator by fixing marks
- Casing liner cup pipe bell and thrust washer made of PE
- Pipe bell protects against pollution from the ground
- All parts of the indicator are made of non-corrosive elements
- Maximum speed: for dimensions up to DN200 - 49 turns
  above DN200 - 121 turns

Application:

Opening indicator as an element determining the position of the valve closing assembly
Flexible and safe extension of the valve stem. Underground mounted

Accessories:

With pillar for electric actuator see: 9114
With T-key see: 9015
With street box see: 9501; 9502; 9503; 9504; 9505, 9506, 9507, 9508, 9509, 9514

Installation:

Setting the indicator:
1. Open the valve to the maximum, then screw in the "O" sign so that it coincides with the needle.

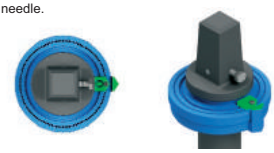

2. Close the valve as much as possible, then screw in the "C" sign so that it coincides with the needle.

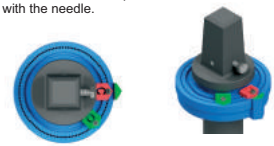

We reserve the rights to modify the production program and the given data without separate notices due to the permanent company development

Extension spindle rigid/knife gate valves

PN10
PN16

SEWAGE

WATER

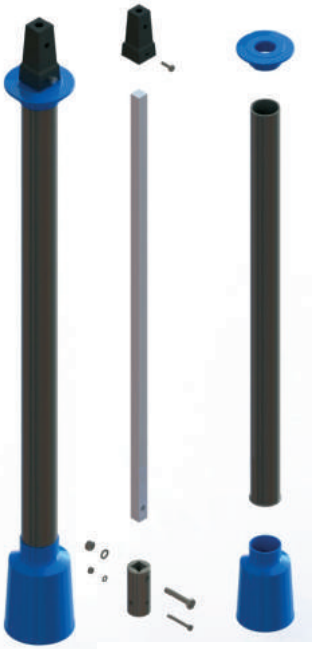

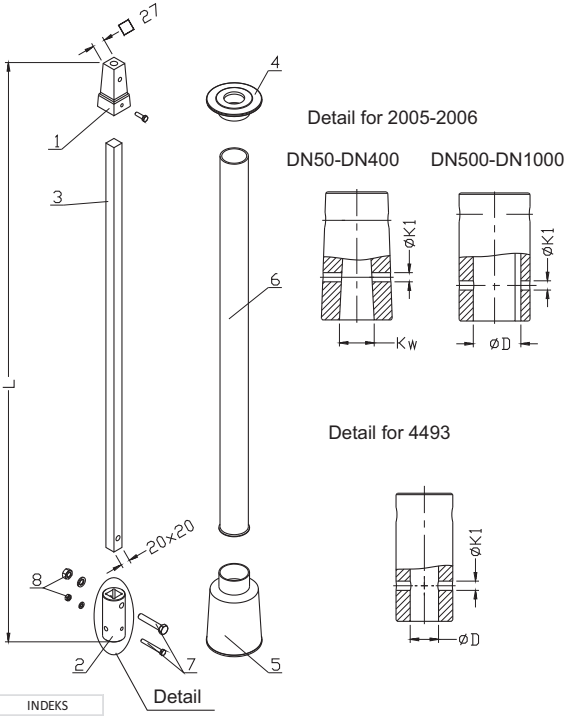

Selection Type	Kw/ØD	ØK1	L*	Diameter range	INDEKS
	[mm]				
2005 2006	Kw12	12	1000	DN50-DN65	9025-1212-1000
	Kw14	12	1000	DN80-DN125	9025-1412-1000
	Kw17	12	1000	DN150-DN300	9025-1712-1000
	Kw19	12	1000	DN350	9025-1912-1000
	Kw24	12	1000	DN400	9025-2412-1000
	Ø30	6	1000	DN500-DN1000	9025-3006-1000
4493	Ø15	5	1000	DN200-DN250	9025-1505-1000
	Ø20	6 lub 8	1000	DN300-DN1200	9025-2006-1000

* Other lengths on request

Product description (standard execution):

• Spindle secured against tearing, the ability to adapt to the terrain in the given range
• Cap made of ductile cast iron EN-GJS-400-15
• The spindle tightly fitted into the square profile
• The coupling of ductile iron EN-GJS-400-15 or stainless steel 1.4301 mounted on the valve stem
• Protective pipe, flange and socket made of PE polyethylene

Application:

Flexible and safe extension of the valve stem. Underground mounted

Accessories:

With pillar handwheel see: 9113
With pillar for electric actuator see: 9114
With T-key see: 9015
With street box see: 9501; 9502; 9503; 9504; 9509

No	Part	Standard execution
1	Cap	Ductlle cas iron EN-GJS-400-15 EN 1563
2	Coupling	Stainless steel 1.4301 EN ISO 10088-1 Ductlle cas iron EN-GJS-400-15 EN 1563
3	Spindle	Stainless steel 1.4301 EN ISO 10088-1
4	Collar	Polyethylene PE EN ISO 1872-1
5	Cup	Polyethylene PE EN ISO 1872-1
6	Casing pipe	Polyethylene PE EN ISO 1872-1
7	Screw	Stainless steel A2 EN ISO 4017
8	Nut	Stainless steel A4 EN ISO 4032

We reserve the rights to modify the production program and the given data without separate notices due to the permanent company development

Caulker

PN16 | SEWAGE | WATER

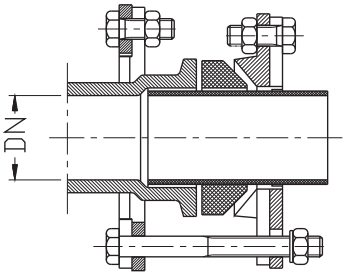

Caulker 9101

DN	Elements	Weight	DN	Elements	Weight
[mm]	[szt]	[kg]	[mm]	[szt]	[kg]
50	2x2	4,8	350	2x4	32,9
80	2x3	7,56	400	2x4	36,75
100	2x3	8,65	500	2x5	49,6
125	2x3	10,25	600	2x6	63,45
150	2x3	11,5	800	2x8	86,6
200	2x4	14,15	1000	2x9	112,7
250	2x4	19,85	1200	2x12	148,8
300	2x4	29,05	-	-	-

Product description (standard execution):

- Made of ductile cast iron EN-GJS 500-7
- Galvanized screws
- Gasket: EPDM; NBR; EN-ISO 1629
- Epoxy coating to EN 14901

Application:

Water and sewage networks

Blind flange X

PN16 | SEWAGE | WATER

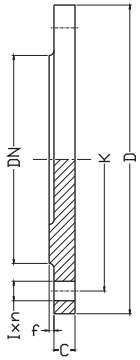

Blind flange 9219

DN	D	K PN16 (PN10)	l PN16 (PN10)	C	f	n PN16 (PN10)	Weight
[mm]						-	[kg]
50	165	125	18	19	3	4	3
80	200	160	18	19	3	8 (4)	4
100	220	180	18	19	3	8	4,5
150	285	240	22	19	3	8	8
200	340	295	22	20	3	12 (8)	11
250	405	355 (350)	26 (22)	22	3	12	17
300	460	410 (400)	26 (22)	24,5	4	12	26
400	580	525 (515)	30 (28)	28	4	16	41
500	715	650 (620)	34 (28)	31,5	4	20	65
600	840	770 (725)	36 (31)	36	5	20	100
800	910	950	43 (35)	43	5	24	207
1000	1255	1170 (1160)	50 (40)	50	5	28	360

Product description (standard execution):

- Made of ductile cast iron EN-GJS 500-7
- Epoxy coating to EN 14901

Application:

Water and sewage networks

We reserve the rights to modify the production program and the given data without separate notices due to the permanent company development

Pipe connector RR
multidiameter

PN10
PN16

WATER

No.	Part	Standard execution
1	Body	Ductile cas iron EN-GJS 500-7 EN 1563
2	Flange	
3	Gasket	Rubber EPDM EN-ISO1629
4	Screw	Steel Fe/Zn5 Stainless steel A2 EN ISO 4017
5	Nut	Steel Fe/Zn5 Stainless steel A4 EN ISO 4032
6	Washer	Steel Fe/Zn5 Stainless steel A2 EN ISO 7091

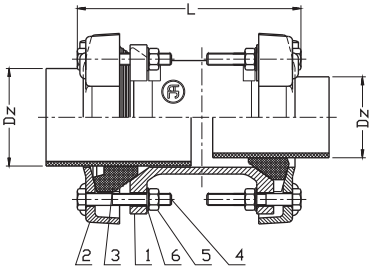

DN	D_z	L	Weight
	[mm]		[kg]
50	40-75	280	8,5
60 / 65	60-95	300	8,0
80	80-115	300	11,5
100	105-135	300	13,8
125	130-165	340	15,5
150	155-195	340	16,8
175	190-230	340	21,0
200	215-258	340	23,0
225	240-280	360	27,0
250	235-275 / 270-310	360	26,0 / 29,0
300	310-350 / 350-390	370	33,0 / 36,0
350	350-390 / 395-435	370	39
400	395-435 /435-470 / 470-505	370	43,0 / 45,0
500	505-540 / 540-575 / 575-610	370	50,0 / 70,0 / 74,0
600	610-645 / 645-680 / 680-715	370	58,0 / 81,0 / 82,0
700	710-745	370	86,0
800	810-845	370	95,0

Product description (standard execution):

- Flexible positioning of the pipe with a buffer zone
- Possibility of axial deflection up to ± 8 °
- Body and the flange made of ductile cast iron EN-GJS 500-7
- The shape of the gasket enables easy installation of pipes without beveling, range
- The gasket provide easy seating into connector and make provision for good contact to a pipe even in places with minor defects, irregularities or corrosion pits
- Galvanized or stainless steel screws
- Epoxy coating resistant of UV, EN 14901, GSK RAL certificate
- Product marking according to EN 19; EN 1074

Application:

Water line networks: potable water and other chemically inert fluids. Connection of straight naked-end pipes made of cast iron, asbestos-cement or PVC.
Working pressure up to 1.6 MPa, temperature up to +70°C

Test control:

Water pressure test according to EN 1074-1; EN 12266-1
Seat: 1,1 xPN
Body: 1,5 x PN

We reserve the rights to modify the production program and the given data without separate notices due to the permanent company development

Flange adaptor for PE and PVC pipes

PN10
PN16

WATER

No.	Part	Standard execution
1	Body	Ductile cast iron EN-GJS 500-7 EN 1563
2	Flange	
3	Ring	Brass CuZn39PbAl1-B EN 1982
4	Ring FORSHEDA 575	Rubber EPDM EN-ISO 1629
5	Screw	Stainless steel A2 EN ISO 4017
6	Washer	Stainless steel A2 EN ISO 7091
7	Pipe	PE; EN ISO 1872-1

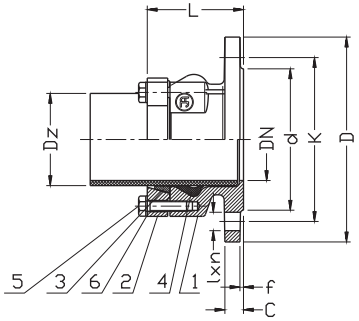

DN	D_z	D PN16 (PN10)	K PN16 (PN10)	d	l x n PN16 (PN10)	f	C	L	Weight
[mm]									[kg]
50	63	165	125	99	19x4	3	19	90	3,8
65	75	185	145	118	19x4	3	19	93	4,3
80	90	200	160	132	19x8(4)	3	19	95	5,5
100	110	220	180	156	19x8	3	19	95	6,5
100	125	220	180	156	19x8	3	19	102	7,2
125	125	250	210	184	19x8	3	19	100	8,3
150	160	285	240	211	23x8	3	19	115	11,6
200	200	340	295	266	23x12(8)	3	20	139	14,5
200	225	340	295	266	23x12(8)	3	20	141	15,8
250	250	400	355 (350)	319	28(23)x12	3	22	156	22,0
250	280	400	355 (350)	319	28(23)x12	3	22	161	23
300	315	455	410 (400)	370	28(23)x12	4	25	180	33
300	355	455	410 (400)	370	28(23)x12	4	25	285	55
400	400	580	525(515)	480	31(28)x16	4	25	245	53
400	450	580	525(515)	480	31(28)x16	4	25	315	71
500	500	715(670)	650(620)	609	34(28)x20	4	26	340	90
500	560	715(670)	650(620)	609	34(28)x20	4	26	410	105
600	630	840(760)	770(725)	720	37(31)x20	5	30	478	145

Product description (standard execution):

- Flexible positioning of the pipe with a buffer zone
- The brass clamp ring hold and protect against pipe movements
- EPDM sealing approved for potable water, chemically resistant and providing
- Excellent compression and recovery to the original shape
- Sealing and strengthening kit
- The sealing and flange included as a set
- Construction pressure of 35 bars EN 12842. Operating pressure max 16 bar
- In case of thin-walled PVC pipes, strengthening sleeve should be used inside the pipe
- Epoxy coating minimum 250 microns according to EN 14901, GSK RAL certificate
- Product marking according to EN 1092-2 (DIN 2501); pressure PN10; PN16

Application:

Water line networks: potable water and other chemically inert fluids. Flanged connectors for naked-end pipes made of PVC or PE
Working pressure up to 1.6 MPa, temperature up to +70°C

Test control:

Water pressure test according to EN 1074-1; EN 12266-1
Sea: 1,1 x PN
Body: 1,5 x PN

We reserve the rights to modify the production program and the given data without separate notices due to the permanent company development

Flange adaptor RK type
multidiameter

PN10
PN16

WATER

No.	Part	Standard execution
1	Body	Ductile cast iron EN-GJS 500-7 EN 1563
2	Flange	
3	Gasket	Rubber EPDM EN ISO1629
4	Screw	Steel Fe/Zn5 Stainless steel A2 EN ISO 4017
5	Nut	Steel Fe/Zn5 Stainless steel A4 EN ISO 4032
6	Washer	Steel Fe/Zn5 Stainless steel A2 EN ISO 7091

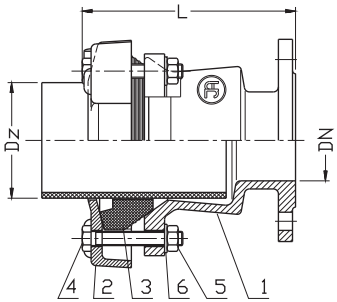

DN	D_z	L	Weight
	[mm]		[kg]
50	40-75	205	7,7
60 / 65	60-95	205	9,3
80	80-115	245	12,0
100	105-135	245	14,0
125	130-165	275	19,0
150	155-195	275	26,0
175	190-230	275	28,0
200	215-258	275	33,0
225	240-280	290	38,0
250	235-275 / 270-310	290	39,0 / 42,0
300	310-350 / 350-390	290 / 320	50,0 / 55,0
350	350-390 / 395-435	290 / 320	58,0 / 65,0
400	400-435 /435-470 / 470-505	300 / 330 / 340	70,0 / 76,0 / 81,0
450	455-490 /490-525	300	80,0 / 83,0
500	505-540 / 540-575 / 575-610	250 / 325 / 325	82,0 / 90,0 / 94,0
600	610-645 / 645-680 / 680-715	250 / 330 / 330	102,0 / 114,0 / 117,0
700	710-745	250	85,0
800	810-845	250	93,0

Product description (standard execution):

- Flexible positioning of the pipe with a buffer zone
- Acceptable axial deviation up to ±4°
- Sealing and strengthening kit
- Connecting the pipe flange with straight naked-end pipes made of different materials: cast iron, PVC etc
- The EPDM elastomer lip seal gasket provides easy and fast installation
- Body and the flange made of ductile cast iron EN-GJS 500-7
- Epoxy coating minimum 250 microns according to EN 14901, GSK RAL certificate
- Product marking according to EN 1092-2 (DIN 2501); pressure PN10; PN16

Application:

Water line networks: potable water and other chemically inert fluids. Connection of straight naked-end pipes made of cast iron, asbestos-cement or PVC to fittings flange.
Working pressure up to 1.6 MPa, temperature up to +70°C

Test control:

Water pressure test according to EN 1074-1; EN 12266-1
Seat: 1,1xPN
Body: 1,5 x PN

We reserve the rights to modify the production program and the given data without separate notices due to the permanent company development

Repair clamp

PN16

WATER

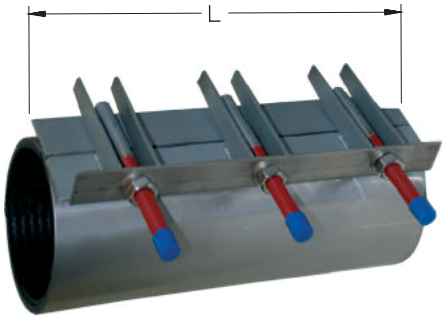

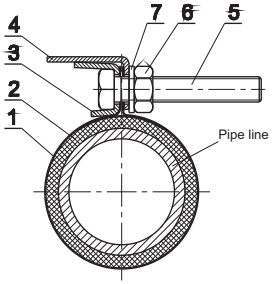

No.	Part	Standard execution
1	Body	Stainless steel 1.4301 EN 10088-1
2	Gasket	Rubber NBR, EPDM; EN ISO 1629 EN 681-1
3	Skirting-board (U)	Stainless steel 1.4301 EN 10088-1
4	Skirting-board (L)	Stainless steel 1.4301 EN 10088-1
5	Screw	Stainless steel A2 EN ISO 4017
6	Nut	Stainless steel A4 EN ISO 4032
7	Washer	Stainless steel A2 EN ISO 7091

DN	L [mm]							
	90	100	150	200	250	300	400	500
25	•	•	•					
32	•	•	•					
40	•	•	•	•	•	•		
50	•	•	•	•	•	•		
65	•	•	•	•	•	•	•	•
80		•	•	•	•	•	•	•
100		•	•	•	•	•	•	•
125		•	•	•	•	•	•	•
150		•	•	•	•	•	•	•
175		•	•	•	•	•	•	•
200		•	•	•	•	•	•	•
225			•	•	•	•	•	•
250			•	•	•	•	•	•
300			•	•	•	•	•	•
350			•	•	•	•	•	•
400			•	•	•	•	•	•
450			•	•	•	•	•	•
500			•	•	•	•	•	•

Product description (standard execution):

- Body and Lock made of stainless steel EN 10088-1
- The lock clamp closure screws are welded along the entire length tangent to the sheet shell and coated with Teflon.
- Connections shall only be made with continuous welds in argon gas shield
- EPDM corrugated sealing covering entire internal surface
- Clamps marked with the manufacture's label (acceptable diameter and material of pipe):
  - for diameters from DN25 to DN225 – single-part
  - for diameters from DN250 to DN450 – bipartite
  - for diameters from DN500 and larger – tripartite
- Screws (EN ISO 4017),
  nuts (EN ISO 3242),
  washers (EN ISO 7091) made of stainless steel (klasa A2)

Application:

Repairing damages (longitudinal crack) on pipe lines made of steel, cast iron, asbestos-cement or soft pipes made of PE or PCV.
Working pressure up to 1.6 MPa and temperature range -20°C to +60°C

We reserve the rights to modify the production program and the given data without separate notices due to the permanent company development

Pillar / stand with position indicator

PN10
PN16

WATER | SEWAGE | GAS

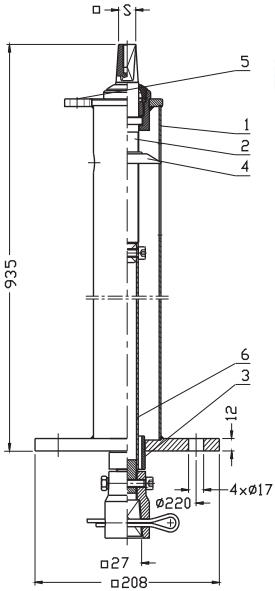

Application:

Water

Fire-fighting system

Gas

No.	Part	Standard execution
1	Body	Stainless Steel 1.4301 EN 10088-1
2	Stem	Stainless Steel1.4021 EN 10088-1
3	Centring bearing	PE 100 SDR 11
4	Indicator	Brass CW617N EN 12165
5	Protection lug	Stainless Steel 1.4301 EN 10088-1
6	Spindle	Stainless Steel 1.4301 EN 10088-1

Index	S	F	Turn for full open	Weight	Fitting samples		
					2111, 2002, 2311, 2312, 2314	2005, 2006	4493, 4496, 4497 gearbox
	[mm]	[Nm]		[kg]	diameter		
9113-064	19	350	64	12	DN40-DN300	DN50-DN150	DN40-DN200
9113-090	27	500	90	14	DN350-DN700	DN200-DN350	DN250-DN450
9113-250	27	500	250	17	DN800-DN1200	DN400-DN1000	DN500-DN1200

Product description (standard execution):

- Fully monolithic body (base, stand pipe, cover) made of stainless steel
- Axial spindle with centring bearing
- Stem stainless steel ball bearing in the vertical and horizontal way
- Protection lug for locking device
- Mechanical position indicator

Application:

Recommended for valves mounted at lower levels in wells or directly in the ground.
Connection with the valve:
axial – extension spindle
not axial - extension spindle with cardans

Assembly:

Rigid extension spindle see: 9006; 9010
Telescopic extension spindle see: 9007; 9011
Extension spindle see: 9008
Rigid extension spindle with cardan see: 9116
Handwheel see: 9301
Locking device

Execution variant:

With inductive or electromechanical sensors
Other executions on request

Installation:

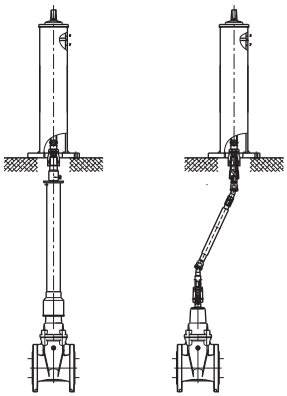

We reserve the rights to modify the production program and the given data without separate notices due to the permanent company development

Pillar / stand for actuator

PN10
PN16

WATER | SEWAGE | GAS

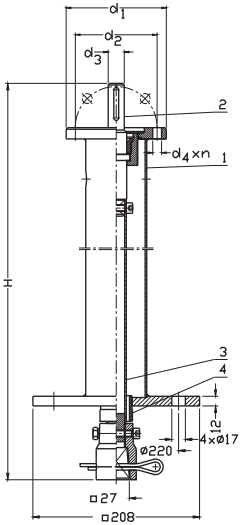

Connection B3 ISO 5210	H	d_1	d_2	d_3	d_4	n	Weight
[mm]	[mm]	[mm]				[szt]	[kg]
F10	685	125	102	20	11	4	13
F14		175	140	30	17	4	16

No.	Part	Standard execution
1	Body	Stainless Steel 1.4301 EN 10088-1
2	Stem	Stainless Steel 1.4021 EN 10088-1
3	Spindle	Stainless Steel 1.4301 EN 10088-1
4	Centring bearing	PE 100 SDR 11 EN 1555

Product description (standard execution):

- Fully monolithic body (base, stand pipe, cover) made of stainless steel
- Axial spindle with centring bearing
- Stem stainless steel ball bearing in the vertical and horizontal way

Application:

Recommended for valves mounted at lower levels in wells or directly in the ground.
Connection with the valve:
axial – extension spindle
not axial - extension spindle with cardans

Assembly:

Rigid extension spindle see: 9006; 9010
Telescopic extension spindle see: 9007; 9011
Extension spindle see: 9008
Rigid extension spindle with cardan see: 9116
Electric drive

Execution variant:

Other executions on request

Installation:

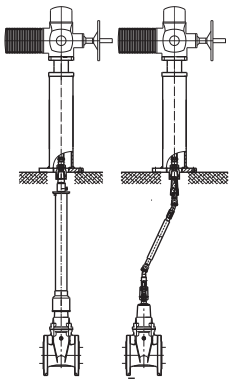

We reserve the rights to modify the production program and the given data without separate notices due to the permanent company development

Rigid extension spindle with Cardan joint

PN10
PN16

WATER | SEWAGE | GAS

TYP 9117

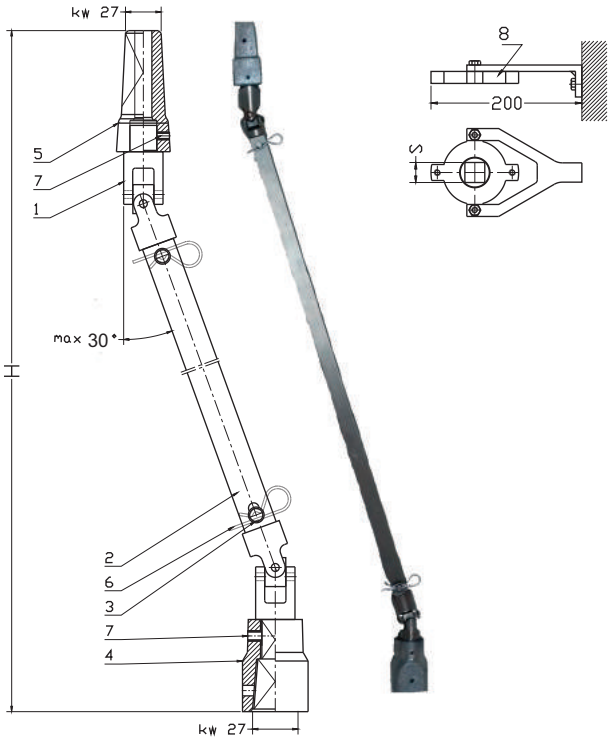

No.	Part	Product execution
1	Cardan joint	Stainless steel 1.4301 EN 10088-1
2	Spindle	Stainless steel 1.4301 EN 10088-1
3	Pin	Stainless steel 1.4301 EN 10088-1
4	Coupling	Ductile cast iron EN-GJS 400-15 EN 1563
5	Cap	Ductile cast iron EN-GJS 400-15 EN 1563
6	Cotter pin	Steel 1.4021 EN 10088-1
7	Spring-type straight pin	Stainless steel 1.4301 EN 10088-1
8*	Rigid extension spindle stabilizer	Stainless steel 1.4301 EN 10088-1

DN	S	H	Max. steering moment
[mm]			[Nm]
40-300	25	1000	250
350-700	30	1000	500

Product description (standard execution):

- Permitted max vertical axis deviation to 30°
- Spindle and cardan joints made of stainless steel
- Motion compensation to 10 [mm]
- Standard height H 1000 [mm] (other executions)
- Parts of iron protected against corrosion coating of zinc.

Application:

For manual or mechanical control valve located axially

Installation:

Directly on the valve in an upright position

We reserve the rights to modify the production program and the given data without separate notices due to the permanent company development

Straight coupling RR type

PN10
PN16

WATER

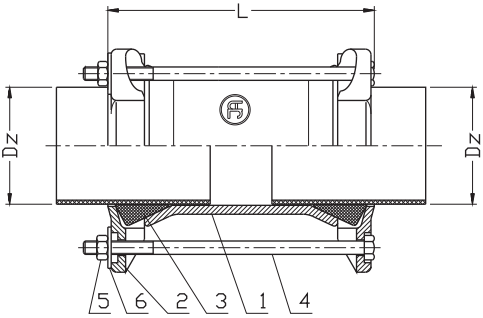

No.	Part	Standard execution
1	Body	Ductile cast iron EN-GJS 500-7 EN 1563
2	Flange	
3	Gasket	Rubber EPDM EN ISO1629
4	Screw	Steel Fe/Zn5 Stainles steel A2 EN ISO 4017
5	Nut	Steel Fe/Zn5 Stainless steel A4 EN ISO 4032
6	Washer	Steel Fe/Zn5 Stainless steel A2 EN ISO 7091

DN	D_2	L	Weight
	[mm]		[kg]
40 / 50	47-60	190	2,2
50 / 65	57-72	210	4,0
50 / 65 / 80	68-85	210	4,5
80 / 100	84-106	210	5,0
100 / 125	103-116 / 108-130	210	7,5
		230	7,0
125 / 150	128-146 / 134-155	210	7,2
		230	7,7
150 / 175 / 200	153-175 / 165-185	210	8,6
		230	8,0
175 / 200	184-207	260	11,5
200	208-225 / 218-236 / 222-250	260	12,0
		260	14,0 / 14,5
250	246-270 / 264-284 / 282-306	300 / 260	17,0
		300	20,0
300	305-326 / 315-335 / 335-355 / 360-386	260 / 300	21,0 / 23,0
		300	24,0
350	386-410	300	28,0
400	408-435 / 425-448 / 465-500	260 / 300	29,0 / 34,0
		330	40

Product description (standard execution):

- Acceptable axial deviation on each side ± 8°
- EPDM sealing approved for potable water
- Stainless steel or galvanized nuts and screws
- Plastic protection caps at screw ends
- Installation in any position allowed
- Body and flange made of ductile cast iron EN-GJS 500-7
- Grooved gasket absorbs minor imperfections of the pipe surface
- Epoxy coating to EN 14901
- Face to face according to the JAFAR documentation

Application:

Water line networks: potable water and other chemically inert fluids. Connection of straight naked-end pipes made of cast iron iron, asbestos-cement or PVC. Working pressure up to 1.6 MPa, temperature up to +70°C

Test control:

Water pressure test according to EN 1074-1; EN 12266-1
Seat: 1,1x PN
Body: 1,5 x PN

We reserve the rights to modify the production program and the given data without separate notices due to the permanent company development

Pipe coupling for PE and PVC pipes RR type

PN10
PN16

WATER

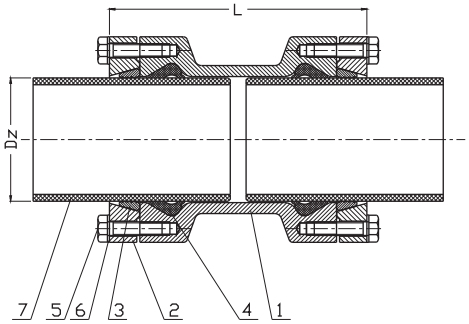

No.	Part	Standard execution
1	Body	Ductile cast iron EN-GJS 500-7 EN 1563
2	Flange	
3	Ring	Brass CW617N EN 12165
4	Ring FORSHEDA 575	Rubber EPDM EN ISO 1629
5	Screw	Stainless steel A2 EN ISO 4017
6	Washer	Stainless steel A2 EN ISO 7091
7	Pipe	PE EN ISO 1872-1

DN	D_z	L	Weight
	[mm]		[kg]
50	63	180	4,7
80	90	190	5,8
100	110	190	6,7
150	160	230	13,0
200	225	276	20,0
250	280	310	23,2
300	315	368	32,0

Product description (standard execution):

- Flexible positioning of the pipe with a buffer zone
- The brass clamp ring hold and protect against pipe movements
- The tube does not move within the plant, providing a sealed connection
- EPDM sealing approved for potable water, chemically resistant and providing excellent compression and recovery to the original shape
- Sealing and strengthening kit
- The sealing and flange included as a set
- Construction pressure of 35 bars according to EN 12842. Operating pressure max 16 bar
- In case of thin-walled PVC pipes, strengthening sleeve should be used inside the pipe
- Epoxy coating minimum 250 microns according to EN 14901, GSK RAL certificate
- Face to face according to the JAFAR documentation

Application:

Water line networks: potable water and other chemically inert fluids.
Connectors for naked-end pipes made of PVC or PE
Working pressure up to 1.6 MPa, temperature up to +70°C

Test control:

Water pressure test according to EN 1074-1; EN 12266-1
Seat: 1,1 x PN
Body: 1,5 x PN

We reserve the rights to modify the production program and the given data without separate notices due to the permanent company development

Flange adaptor RK type

PN10
PN16

WATER

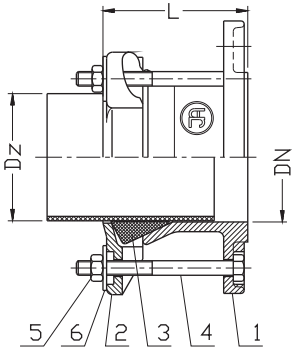

No.	Part	Standard execution
1	Body	Ductile cast iron EN-GJS 500-7 EN 1563
2	Flange	
3	Gasket	Rubber EPDM EN ISO1629
4	Screw	Steel Fe/Zn5 Stainless steel A2 EN ISO 4017
5	Nut	Steel Fe/Zn5 Stainless steel A4 EN ISO 4032
6	Washer	Steel Fe/Zn5 Stainless steel A2 EN ISO 7091

DN	D_z	L	Weight
	[mm]		[kg]
50 / 65	57-72	120	5,0
50 / 65 / 80	68-85	120	6,0
80 / 100	84-106	120	6,0
100 / 125	103-116 / 108-130	120	7,0 / 7,8
125 / 150	128-146 / 134-154	120	9,0 / 9,6
150 / 175 / 200	153-175 / 165-185	120	11,0
		120	
175 / 200	184-207	120	13,6
200	208-225 / 218-236 / 222-250	150	14,5
		150	
250	246-270 / 264-284 / 282-306	150	18,5 / 18,5 / 22,0
		150	
300	305-326 / 315-335 / 334-355 / 360-386	150	23,0 / 27,0 / 28,0 / 36,0
		150	
350	386-410	150	25,0 / 28,0
400	408-435 / 425-448 / 465-500	180	28,0 / 30,0 / 44,0

Product description (standard execution):

- Acceptable axial deviation at each end up to ±4°
- EPDM Rubber sealing approved for potable water
- Stainless steel or galvanized nuts and screws
- Plastic protection caps at screw ends
- Installation in any position allowed
- Body and flange made of ductile cast iron EN-GJS 500-7
- Grooved gasket absorbs minor imperfections of the pipe surface
- Epoxy coating to EN 14901
- Product marking according to EN 1092-2 (DIN 2501); pressure PN10; PN16
- Face to face according to the Jafar documentation

Application:

Water line networks: potable water and other chemically inert fluids. Connection of straight naked-end pipes made of cast iron, asbestos-cement or PVC to fittings flange
Working pressure up to 1.6 MPa, temperature up to +70°C

Test control:

Water pressure test according to EN 1074-1; EN 12266-1
Seat: 1,1xPN
Body: 1,5 x PN

We reserve the rights to modify the production program and the given data without separate notices due to the permanent company development

Pipe coupling

PN10
PN16

WATER

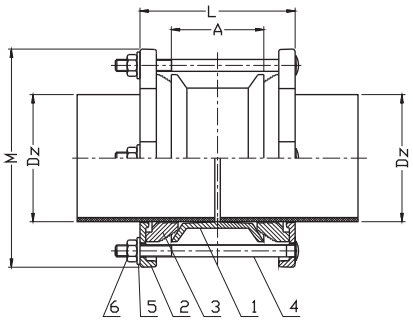

No.	Part	Standard execution
1	Body	Ductile cast iron EN-GJS 500-7 EN 1563
2	Flange	
3	Gasket	Rubber EPDM EN ISO 1629
4	Screw	Steel Fe/Zn5 Stainless steel A2 EN ISO 4017
5	Washer	Steel Fe/Zn5 Stainless steel A2 EN ISO 7091
6	Nut	Steel Fe/Zn5 Stainless steel A4 EN ISO 4032

DN*	D_z	L	A	M	Weight
	[mm]				[kg]
40	47-60	190	100	149,5	3,1
50	57-74	190	95	154,5	3,0
65	63-85	190	95	173,5	3,6
80	84-107	190	95	195,5	4,1
100	106-132	190	95	224,5	4,8
125	132-158	190	95	254,5	6,0
150	157-185	190	95	280,5	6,9
200	189-212	230	130	306,5	9,4
200	218-244	230	130	342,5	10,9
250	264-295	230	130	399,5	14,6
300	315-349	230	130	462,5	19,4

* DN350 do DN2000 on request.

Product description (standard execution):

- Acceptable axial deviation at each end up to ±6°
- EPDM Rubber sealing approved for potable water
- Stainless steel or galvanized nuts and screws
- Plastic protection caps at screw ends
- Installation in any position allowed
- Body and flange made of ductile cast iron EN-GJS 500-7
- Grooved gasket absorbs minor imperfections of the pipe surface
- Epoxy coating minimum 250 microns according to EN 14901, GSK RAL certificate
- Face to face according to the Jafar documentation

Application:

Water line networks: potable water and other chemically inert fluids. Connection of straight naked-end pipes made of cast iron, asbestos-cement or PVC.
Working pressure up to 1.6 MPa, temperature up to +70°C

Test control:

Water pressure test according to EN 1074-1; EN 12266-1
Seat: 1,1 x PN
Body: 1,5 x PN

We reserve the rights to modify the production program and the given data without separate notices due to the permanent company development

Flange adaptor

PN10
PN16

WATER

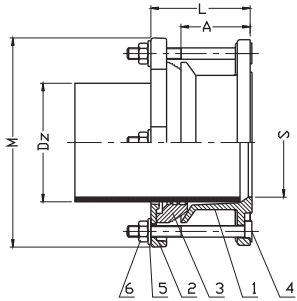

No.	Part	Standard execution
1	Body	Ductile cast iron EN-GJS 500-7 EN 1563
2	Flange	
3	Gasket	Rubber EPDM EN ISO 1629
4	Screw	Steel Fe/Zn5 Stainless steel A2 EN ISO 4017
5	Washer	Steel Fe/Zn5 Stailess steel A2 EN ISO 7091
6	Nut	Steel Fe/Zn5 Stainless steel A4 EN ISO 4032

DN*	S	D_z	L	A	M	Weight
[mm]						[kg]
50	59	57-74	124	75	164	2,7
65	75	63-85	124	75	197	3,5
80	101	84-107	124	75	203	3,7
100	121	106-132	134	75	228	4,4
125	150	132-158	134	75	282	5,6
150	173	157-185	134	75	283	6,0
200	202	189-212	134	75	337	8,3
200	225	218-244	134	75	338	8,3
250	277	264-295	146	85	402	11,4
300	329	315-349	155	100	458	14,8

* DN350 do DN600 on request.

Product description (standard execution):

- Acceptable axial deviation at each end up to ±3°
- EPDM Rubber sealing approved for potable water
- Stainless steel or galvanized nuts and screws
- Plastic protection caps at screw ends
- Installation in any position allowed
- Body and flange made of ductile cast iron EN-GJS 500-7
- Grooved gasket absorbs minor imperfections of the pipe surface
- Epoxy coating minimum 250 microns according to EN 14901, GSK RAL certificate
- Flange connection according to EN 1092-2 (DIN 2501) pressure PN10, PN16

Application:

Water line networks: potable water and other chemically inert fluids. Connection of straight naked-end pipes made of cast iron, asbestos-cement or PVC to fittings flange.
Working pressure up to 1.6 MPa, temperature up to +70°C

Test control:

Water pressure test according to EN 1074-1; EN 12266-1
Seat: 1,1 x PN
Body: 1,5 x PN

We reserve the rights to modify the production program and the given data without separate notices due to the permanent company development

Stepped coupling

PN10
PN16

WATER

GAS

No.	Part	Standard execution
1	Body	Ductile cast iron EN-GJS 450-10 EN 1563
2	Retaining ring	
3	Gasket	Rubber EN ISO1629 NBR EN 682 EPDM EN 681-1
4	Screw	Stainless steel A2 EN ISO 4017
5	Nut	Stainless steel A2 EN ISO 4032
6	Washer	Stainless steel A2 EN ISO 7091

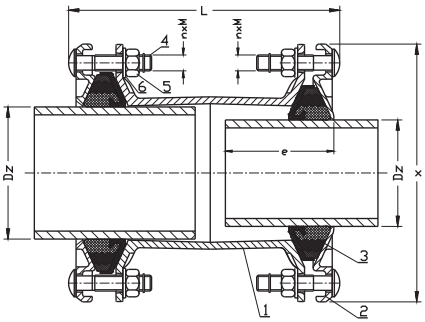

DN	PN water	PN gas	D_z	L	x	e	n x M	Weight
[mm]	[bar]		[mm]				-	[kg]
50	16	8	46-71 / 46-71	209-233	164	95	3xM12 / 3xM12	4,8
65	16	8	63-90 / 63-90	220-250	186	100	3xM12 / 3xM12	5,6
80	16	8	84-105 / 84-105	234-262	204	115	3xM12 / 3xM12	7,2
100	16	8	104-132 / 104-132	230-268	234	110	3xM16 / 3xM16	9,4
125	16	8	132-155 / 132-155	246-282	264	120	4xM16 / 4xM16	12,0
150	16	8	154-192 / 154-192	242-298	304	120	4xM16 / 4xM16	14,8
200	16	8	192-232 / 192-232	297-351	354	140	6xM16 / 6xM16	28,6
225	16	8	230-268 / 230-268	342-404	386	145	6xM20 / 6xM20	33,4
250	16	8	267-310 / 267-310	354-424	432	170	6xM20 / 6xM20	40,0
300	16	8	315-356 / 315-356	356-426	490	170	8xM20 / 8xM20	51,0
350	10	5	352-393 / 352-393	504-588	534	245	10xM20 / 10xM20	61,0
400	10	5	392-433 / 392-433	562-648	574	275	10xM20 / 10xM20	73,0
450	10	5	450-482 / 450-482	530-580	641	275	10xM20 / 10xM20	100,0
500	10	5	500-532 / 500-532	530-580	691	275	10xM20 / 10xM20	109,0
550	10	5	548-580 / 548-580	530-580	739	275	12xM20 / 12xM20	115,0
600	10	5	605-637 / 605-637	530-580	796	275	14xM20 / 14xM20	113,0

For PE and PVC pipes recommends use steel inserts.

Product description (standard execution):

- Protection against pull out of the pipe made of stainless steel A4
- Acceptable axial deviation up to ±8°
- Applicable to all types straight naked-end pipes
- Elastomer gasket enabling easy assembly
- Body and flange made of ductile cast iron EN-GJS 450-10
- Stainless steel bolts and nuts
- Plastic protection caps at screw ends
- Installation in any position allowed
- Epoxy coating to EN 14901

Application:

Water line networks: potable water of natural gas networks and other chemically inert fluids. Connection of straight naked-end pipes made of cast iron iron, asbestos-cement or PVC.
Working pressure up to 1.6 MPa, temperature up to +50°C

Test control:

Water pressure test according to EN 1074-1; EN 12266-1
Seat: 1,1 x PN
Body: 1,5 x PN

We reserve the rights to modify the production program and the given data without separate notices due to the permanent company development

Flange adaptor

PN10
PN16

WATER

GAS

No.	Part	Standard execution
1	Body	Ductile cast iron EN-GJS 450-10 EN 1563
2	Retaining ring	
3	Gasket	Rubber EN ISO1629 NBR EN 682 EPDM EN 681-1
4	Screw	Stainless steel A2 EN ISO 4017
5	Nut	Stainless steel A4 EN ISO 4032
6	Washer	Stainless steel A2 EN ISO 7091

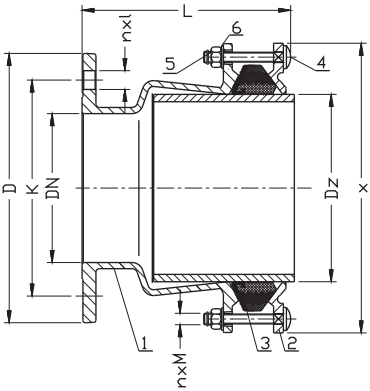

DN	PN water	PN gas	D_z	D PN16 (PN10)	K PN16 (PN10)	n x l PN16 (PN10)	n x M	L	x	Weight
[mm]	[bar]		[mm]				-	[mm]		[kg]
50	16	8	46-71	165	125	4x19	3xM12	179-194	164	5,6
65	16	8	63-90	185	145	4x19	3xM12	187-198	186	6,5
80	16	8	84-105	200	160	8x19	3xM12	183-197	204	7,6
100	16	8	104-132	220	180	8x19	3xM16	181-200	236	8,6
125	16	8	132-155	250	210	8x19	4xM16	196-214	264	13,0
150	16	8	154-192	285	240	8x23	4xM16	194-222	304	18,0
200	16	8	192-232	340	295	12(8)x23	6xM16	224-251	354	21,7
250	16	8	267-310	405 (395)	355 (350)	12x28(23)	6xM20	260-295	432	31,0
300	16	8	315-356	460 (445)	410 (400)	12x28(23)	8xM20	283-318	490	40,5
350	10	5	352-393	520 (505)	470 (460)	16x28(23)	8xM20	326-364	534	52,0
400	10	5	392-433	580 (565)	525 (515)	16x31(28)	10xM20	356-395	574	65
500	10	5	500-532	715 (670)	650 (620)	20x34(28)	10xM20	365-390	715	94
600	10	5	605-637	840 (780)	770 (725)	20x37(31)	14xM20	365-390	840	120

For PE and PVC pipes recommends use steel inserts.

Product description (standard execution):

- Protection against pull out of the pipe made of stainless steel A4
- Acceptable axial deviation up to ±8°
- Applicable to all types straight naked-end pipes
- Elastomer gasket enabling easy assembly
- Body and flange made of ductile cast iron EN-GJS 450-10
- Stainless steel bolts and nuts
- Plastic protection caps at screw ends
- Installation in any position allowed
- Epoxy coating to EN 14901
- Flange connection according to EN 1092-2 (DIN 2501) pressure PN10, PN16

Application:

Water line networks: potable water of natural gas networks and other chemically inert fluids. Connection of straight naked-end pipes made of cast iron iron, asbestos-cement or PVC to fitting flange.
Working pressure up to 1.6 MPa, temperature up to +50°C

Test control:

Water pressure test according to EN 1074-1; EN 12266-1
Seat: 1,1x PN
Body: 1,5 x PN

We reserve the rights to modify the production program and the given data without separate notices due to the permanent company development

Reducer fitting

PN10
PN16

WATER

GAS

No.	Part	Standard execution
1	Body	Ductile cast iron EN-GJS-450-10 EN 1563
2	Retaining ring	
3	Gasket	Rubber EN ISO1629 NBR EN 682 EPDM EN 681-1
4	Screw	Stainless steel A2 EN ISO 4017
5	Nut	Stainless steel A4 EN ISO 4032
6	Washer	Stainless steel A2 EN ISO 7091

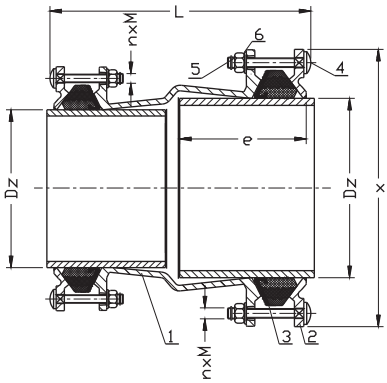

DN	PN water	PN gas	D_z	L	x	e	n x M	Weight
[mm]	[bar]		[mm]				-	[kg]
50-65	16	8	46-71 / 63-90	242-268	186	95	3xM12 / 3xM12	5,5
65-80	16	8	63-90 / 84-105	242-268	204	115	3xM12 / 3xM12	6,7
80-100	16	8	84-105 / 104-132	232-265	236	110	3xM12 / 3xM16	8,3
100-125	16	8	104-132 / 132-155	238-275	264	120	3xM16 / 4xM16	11,0
100-150	16	8	104-132 / 154-192	276-323	304	120	4xM16 / 4xM16	13,8
125-150	16	8	132-155 / 154-192	276-322	304	120	4xM16 / 4xM16	14,4
150-200	16	8	154-192 / 192-232	265-321	354	120	4xM16 / 6xM16	22,0
200-225	16	8	192-232 / 230-268	340-398	386	145	6xM16 / 6xM20	32,0
225-250	16	8	230-268 / 267-310	358-424	432	170	6xM20 / 6xM20	36,0
250-300	16	8	267-310 / 315-356	356-426	490	170	6xM20 / 8xM20	49,0
300-350	10	5	315-356 / 352-393	446-530	534	225	8xM20 / 8xM20	54,0
300-400	10	5	315-356 / 392-433	462-546	571	240	8xM20 / 10xM20	69,0
350-400	10	5	352-393 / 392-433	470-554	574	240	8xM20 / 10xM20	65,0
400-425	10	5	392-433 / 392-433	500-550	623	275	10xM20 / 10xM20	86,0
400-450	10	5	392-433 / 392-433	500-550	641	275	10xM20 / 10xM20	88,0
425-475	10	5	432-464 / 481-513	555-605	672	275	10xM20 / 10xM20	100,0
450-500	10	5	450-482 / 500-532	555-605	691	275	10xM20 / 10xM20	107,0
500-550	10	5	500-532 / 548-580	550-600	739	275	12xM20 / 10xM20	113,5
550-600	10	5	548-580 / 605-637	550-600	796	275	12xM20 / 14xM20	130,0

For PE and PVC pipes recommends use steel inserts.

Product description (standard execution):

- Protection against pull out of the pipe made of stainless steel A4
- Acceptable axial deviation up to ±8°
- Applicable to all types straight naked-end pipes
- Elastomer gasket enabling easy assembly
- Body and flange made of ductile cast iron EN-GJS 450-10
- Stainless steel bolts and nuts
- Plastic protection caps at screw ends
- Installation in any position allowed
- Enables connection of two pipes with different diameter each
- Epoxy coating to EN 14901

Application:

Water line networks: potable water of natural gas networks and other chemically inert fluids. Connection of straight naked-end pipes made of cast iron iron, asbestos-cement or PVC.
Working pressure up to 1.6 MPa, temperature up to +50°C

Test control:

Water pressure test according to EN 1074-1; EN 12266-1
Seat: 1,1 x PN
Body: 1,5 x PN

We reserve the rights to modify the production program and the given data without separate notices due to the permanent company development

Cast iron spigot flange Type F

PN10
PN16

SEWAGE

WATER

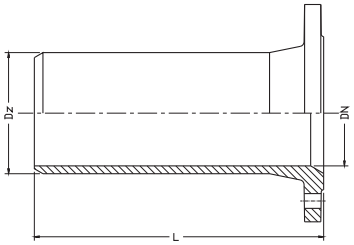

Cast iron spigot flange Type F 9201

DN	DZ	L
	[mm]	
50	66	340
65	82	345
80	98	350
100	118	360
125	114	370
150	170	380
200	222	400
250	274	420
250	274	500
300	326	440
350	378	460
400	429	480
500	532	520
600	635	560
800	842	600
1000	1048	600

Product description (standard execution):

- Made of ductile cast iron EN-GJS 500-7
- UV resistant epoxy coating to EN 14901
- Flange connection and connector according to EN 1092-2 (DIN 2501), pressure PN10 PN16
- Product according to EN 545
- Hygienic certificate PZH for drinking water
- Working pressure PN10 / PN16

Application:

The water supply system and sewage
Item 9201 for use with cast iron pipes
Item 9221 for use with PVC pipe

Cast iron spigot flange Type FW

PN10
PN16

SEWAGE

WATER

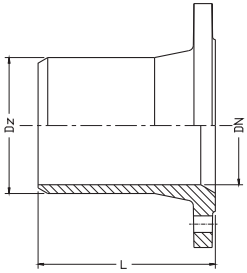

Cast iron spigot flange Type FW 9221

DN	D_z	L
	[mm]	
50	63	125
80	90	125
80	90	135
100	110	130
125	140	150
125	140	170
150	160	160
200	200	170
200	225	210
250	280	205
250	280	250
300	315	205
400	450	270
500	560	-
600	630	-

Product description (standard execution):

- Made of ductile cast iron EN-GJS 500-7
- UV resistant epoxy coating to EN 14901
- Flange connection and connector according to EN 1092-2 (DIN 2501), pressure PN10 PN16
- Product according to EN 545
- Hygienic certificate PZH for drinking water
- Working pressure PN10 / PN16

Application:

The water supply system and sewage
Item 9201 for use with cast iron pipes
Item 9221 for use with PVC pipe

We reserve the rights to modify the production program and the given data without separate notices due to the permanent company development

Cast iron flanged elbow with stand Type N

PN10
PN16

SEWAGE

WATER

Cast iron elbow N 9202

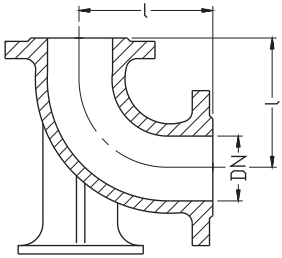

DN	l	Weight
[mm]		[kg]
80	165	13
100	180	17
150	220	29
200	260	46
250	350	73
300	400	104
400	500	177
500	600	281
600	700	425
800	900	860

Product description (standard execution):

- Made of ductile cast iron EN-GJS 500-7
- UV resistant epoxy coating EN 14901
- Flange connection according to EN 1092-2 (DIN 2501), pressure PN10, PN16
- Product according to EN 545
- Hygienic certificate PZH for potable water
- Working pressure PN10 / PN16

Application:

In water supply systems, potable water and other chemically inert liquids as well as raw or industrial sewage

Flanged cross Type TT

PN10
PN16

SEWAGE

WATER

Flanged cross type CF 9218

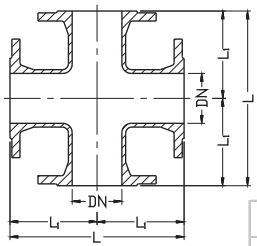

DN	L	L_1	Weight
	[mm]		[kg]
80	330	165	22
100	360	180	27
150	440	220	50
200	520	260	80
250	700	350	104
300	800	400	145
400	900	450	215
500	1000	500	305
600	1100	550	420

Product description (standard execution):

- Made of ductile cast iron EN-GJS 500-7
- UV resistant epoxy coating, EN 14901
- Flange connection according to EN 1092-2 (DIN 2501), pressure PN10, PN16
- Product according to EN 545
- Hygienic certificate PZH for potable water
- Working pressure PN10 / PN16

Application:

In water supply systems, potable water and other chemically inert liquids as well as raw or industrial sewage

We reserve the rights to modify the production program and the given data without separate notices due to the permanent company development

Cast iron flanged tee connector

PN10
PN16

SEWAGE

WATER

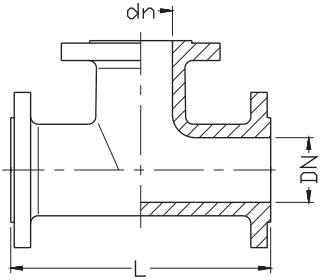

DN	dn	L	Weight	DN	dn	L	Weight	DN	dn	L	Weight
	[mm]		[kg]		[mm]		[kg]		[mm]		[kg]
50	50	300	11,5	250	80	700	65,0	450	100	460	190,0
65	50	330	12,0	250	100	700	69,0	450	150*	500	195*
65	65	330	12,5	250	150	700	70,0	450	200	630	205,0
80	50	330	14,2	250	200	700	80,0	450	300*	745*	218,0*
80	65	330	14,6	250	250	700	89,0	450	450	920	240,0
80	80	330	15,6	300	80	800	93,0	500	80	1000	212,0
100	50	320	18,5	300	100	800	97,0	500	100	1000	215,0
100	65	330/360	20,0	300	150	800	98,0	500	150	1000	255,0
100	80	330/360	18,4	300	200	800	101,0	500	200	1000	262,0
100	100	360	19,3	300	250	800	106,0	500	250	1000	270,0
125	80	400	23,1	300	300	800	125,0	500	300	1000	274,0
125	100	400	23,5	350	150*	530*	123,0*	500	400	1000	285,0
125	125	400	25,5	350	200	585	129,0	500	500	1000	300,0
150	50*	440/325/ 340*	29,5*	350	250*	645*	135,0*	600	80	580	304,0
150	80	440	28,5	350	300	700	141,0	600	200	700	307,0
150	100	440	29,5	350	350	850	167,0	600	400	930	323,0
150	125	440	34	400	80*	900	159,0*	600	600	1100	350,0
150	150	440	32,5	400	100*	900	161,0*	800	200	690	350,0
200	80	520	43,5	400	150*	900	163,0*	800	400	910	430,0
200	100	520	44,5	400	200	900	169,0	800	800	1350	630,0
200	125	440/520	45,0	400	250*	900	175,0*	1000	400	990	650,0
200	150	520	45,5	400	300*	900	179,0*	1000	600	1650	990,0
200	200	520	49,0	400	350*	900	185,0*	-	-	-	-
-	-	-	-	400	400	900	198,0	-	-	-	-

* - on request

Product description (standard execution):

- Made of ductile cast iron EN-GJS 500-7
- UV resistant epoxy coating, to EN 14901
- Flange connection according to EN 1092-2 (DIN 2501), pressure PN10, PN16
- Product according to EN 545
- Hygienic certificate PZH for potable water
- Working pressure PN10 / PN16

Application:

In water supply systems, potable water and other chemically inert liquids as well as raw or industrial sewage

We reserve the rights to modify the production program and the given data without separate notices due to the permanent company development

Reduction collar XR

PN10
PN16

SEWAGE

WATER

Type „A"

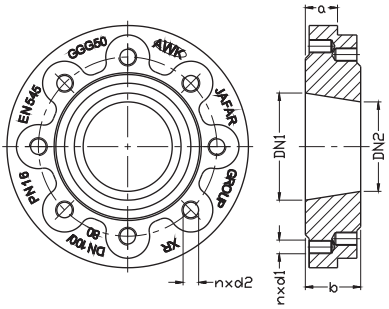

Type „B"

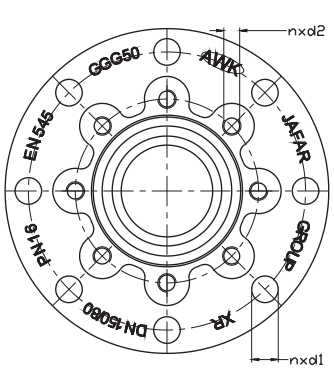

Product description (standard execution):

- Made of ductile cast iron EN-GJS 500-7
- UV resistant epoxy coating, according to EN 14901
- Flange connection and connector according to EN 1092-2 (DIN 2501)
- Product according to EN 545
- Working pressure PN10 / PN16

Application:

- In water supply systems potable water and other chemically inert liquids as well as raw or industrial sewage
- It allows connecting flange pipes of different diameters with short housing
- Apply instead flanged concentric reducer Type FFR

DN	DN_1		DN_2		a ±1	b ±1	Type	Working pressure PN
	n	d_1	n	d_2				
	[mm]							
65 / 50	4	M16	4	M16	31	46	A	16
80 / 50	8	M16	4	M16	21	31	A	16
80 / 65	8	M16	4	M16	22	33	A	16
100 / 50	8	19	4	M16	20	31	B	16
100 / 65	8	M16	4	M16	22	32	A	16
100 / 80	8	M16	8	M16	30	46	A	16
125 / 80	8	M16	8	M16	19	32	A	16
125 / 100	8	M16	8	M16	32	44	A	16
150 / 80	8	23	8	M16	21	31	B	16
150 / 100	8	M20	8	M16	28	32	A	16
150 / 125	8	M20	8	M16	32	46	A	16
200 / 80	12	23	8	M16	23	36	B	16
200 / 100	12	23	8	M16	24	34	B	16
200 / 150	8	M20	8	M20	24	39	A	10

We reserve the rights to modify the production program and the given data without separate notices due to the permanent company development

Flange and double-socket tee connector MMA

PN10
PN16

SEWAGE

WATER

Flange and double-socket tee connector MMA 9205

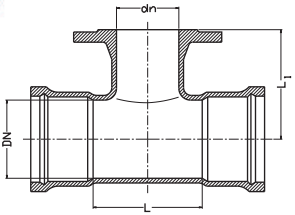

DN	dn	L	L_1	Weight	DN	dn	L	L_1	Weight
[mm]				[kg]	[mm]				[kg]
80	80	170	165	13	300	150	260	310	56
100	50	155	155	13	300	200	320	320	65
100	80	175	175	15	300	300	435	340	86
100	100	190	180	16	400	80	190	355	85
150	80	180	200	21	400	100	210	360	87
150	100	200	205	23	400	150	270	370	100
150	150	260	220	28	400	200	330	380	105
200	80	180	225	29	400	250	390	390	114
200	100	200	230	31	400	300	420	400	117
200	150	260	245	37	400	400	560	420	158
200	200	320	260	43	500	100	215	420	107
250	80	185	265	38	500	150	275	430	132
250	100	205	270	40	500	200	330	440	138
250	150	260	280	45	500	300	450	460	172
250	200	315	290	53	500	500	650	500	246
250	250	380	300	62	600	200	340	500	197
300	80	185	295	48	600	600	770	580	345
300	100	205	300	50	-	-	-	-	-

Product description (standard execution):

- Made of ductile cast iron EN-GJS 500-7
- UV resistant epoxy coating, to EN 14901
- Flange connection according to EN 1092-2 (DIN 2501), pressure PN10, PN16
- Product according to EN 545
- Hygienic certificate PZH for potable water
- Working pressure PN10 / PN16

Application:

In water supply systems, potable water and other chemically inert liquids as well as raw or industrial sewage

Socket tee connector MMB

PN10
PN16

SEWAGE

WATER

Socket tee MMB 9206

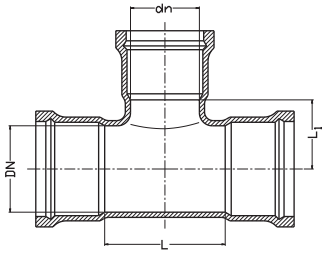

DN	dn	L	L_1	Weight
[mm]				[kg]
80	80	170	85	12
100	80	170	95	13
100	100	190	95	14
150	80	180	120	20
150	100	200	125	21
150	150	260	130	26
200	80	180	145	26
200	100	200	150	29
200	150	260	155	34
200	200	320	160	39
250	100	200	170	45
250	150	260	175	51
250	200	320	185	57
250	250	380	190	64
300	150	260	205	66
300	200	320	205	73
300	300	440	220	99

Product description (standard execution):

- Made of ductile cast iron EN-GJS 500-7
- UV resistant epoxy coating, to EN 14901
- Flange connection according to EN 1092-2 (DIN 2501), pressure PN10, PN16
- Product according to EN 545
- Hygienic certificate PZH for potable water
- Working pressure PN10 / PN16

Application:

In water supply systems, potable water and other chemically inert liquids as well as raw or industrial sewage

We reserve the rights to modify the production program and the given data without separate notices due to the permanent company development

Flanged bend Type Q

PN10
PN16

SEWAGE

WATER

Flanged bend Type Q 9207

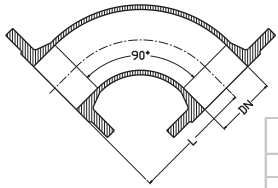

DN	L	Weight
[mm]		[kg]
50	150	7
65	165	10
80	165	10
100	180	13
125	200	18
150	220	20
200	260	32
250	350	50
300	400	70
350	450	105
400	500	114
500	600	180
600	700	270
800	900	527

Product description (standard execution):

- Made of ductile cast iron EN-GJS 500-7
- UV resistant epoxy coating, to EN 14901
- Flange connection and connector according to EN 1092-2 (DIN 2501), pressure PN10 PN16
- Product according to EN 545
- Hygienic certificate PZH for potable water
- Working pressure PN10 / PN16

Application:

In water supply systems, potable water and other chemically inert liquids as well as raw or industrial sewage

Flanged bend Type FFK

PN10
PN16

SEWAGE

WATER

Flanged bend Type FFK 9209

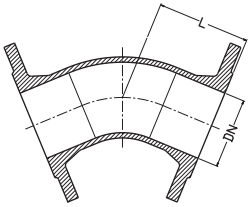

DN	L	Weight	L	Weight	L	Weight	L	Weight
[mm]	[mm]	[kg]	[mm]	[kg]	[mm]	[kg]	[mm]	[kg]
Angle	11,25°		22,5°		30°		45°	
80	130	9,0	130	9,0	130	10,0	130	10,0
100	140	11,5	140	11,5	140	12,0	140	12,0
150	160	18,5	160	18,5	160	20,0	160	20,0
200	180	28,0	180	28,0	180	29,0	180	29,0
250	210	45,0	210	45,0	210	45,0	350	62,0
300	255	60,0	255	60,0	255	60,0	400	77,0
400	205	75,1	239	81,2	240	81	324	95,2

Product description (standard execution):

- Made of ductile cast iron EN-GJS 500-7
- UV resistant epoxy coating, to EN 14901
- Flange connection and connector according to EN 1092-2 (DIN 2501), pressure PN10 PN16
- Product according to EN 545
- Hygienic certificate PZH for potable water
- Working pressure PN10 / PN16

Application:

In water supply systems, potable water and other chemically inert liquids as well as raw or industrial sewage

We reserve the rights to modify the production program and the given data without separate notices due to the permanent company development

Socket bend Type MMQ

PN10
PN16

SEWAGE

WATER

Socket bend MMQ 9208

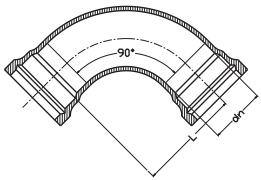

dn	L	Weight
[mm]		[kg]
80	98	9
100	120	11
150	160	23
200	220	35
250	240	54
300	280	79
400	400	126
500	500	237
600	600	312

Product description (standard execution):

- Made of ductile cast iron EN-GJS 500-7
- UV resistant epoxy coating, to EN 14901
- Product according to EN 545
- Hygienic certificate PZH for potable water
- Working pressure PN10 / PN16

Application:

In water supply systems, potable water and other chemically inert liquids as well as raw or industrial sewage

Socket bend Type MMK

PN10
PN16

SEWAGE

WATER

Socket bend MMK 9210

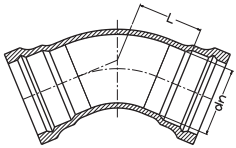

dn	L	Weight	L	Weight	L	Weight	L	Weight
[mm]		[kg]	[mm]	[kg]	[mm]	[kg]	[mm]	[kg]
kąt	11,25°		22,5°		30°		45°	
80	30	6,5	40	7,0	50	7,0	60	7,5
100	30	8,0	40	9,0	55	9,0	65	9,0
150	55	14,0	70	14,0	75	15,0	75	16,0
200	40	20,0	65	21,0	80	22,0	90	25,0
250	55	27,5	80	30,0	80	32,0	110	36,0
300	55	36,5	85	40,5	110	43,0	150	48,0
400	65	75,0	110	86,0	130	87,0	185	95,0
500	75	95,0	130	102,0	180	115,0	240	132,0
600	85	138,0	150	151,0	215	170,0	285	245,0

Product description (standard execution):

- Made of ductile cast iron EN-GJS 500-7
- UV resistant epoxy coating, to EN 14901
- Product according to EN 545
- Hygienic certificate PZH for potable water
- Working pressure PN10 / PN16

Application:

In water supply systems, potable water and other chemically inert liquids as well as raw or industrial sewage

We reserve the rights to modify the production program and the given data without separate notices due to the permanent company development

Flanged concentric reducer Type FFR

PN10
PN16

SEWAGE

WATER

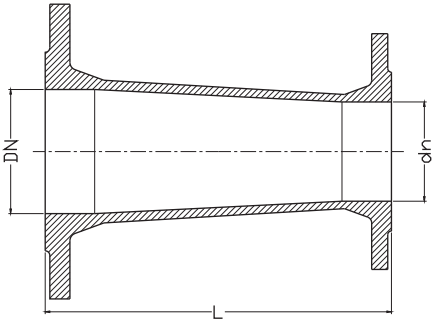

DN	d_n	L	Weight	DN	d_n	L	Weight
[mm]			[kg]	[mm]			[kg]
50	40	150	5,9	250	80	300	27,5
65	50	200	6,9	250	100	300	28,4
80	40	200	8,0	250	150*	300*	33,0*
80	50	120 / 200	8,4	250	200	300	29,5
80	65	200	8,8	300	100	300	31,3
100	50	200	9,4	300	150	300	36,7
100	65	200	9,8	300	150	300	46,0
100	80	200	10,2	300	200	300	51,0
125	80	200	14,0	300	250	300	50,0
150	50	200	14,2	350	300	300	54,2
150	80	200	14,6	400	200	300	61
150	80*	300*	16,5*	400	250	300	66
150	100	200	14,8	400	300	300	73
150	100	300	16,8	400	350	300	85
200	50	300	22,2	500	300	600	143
200	80	300	22,5	500	400	600	162
200	100	300	27,0	600	400	600	218
200	100*	300*	22,9*	600	500	600	238
200	150	300	23,7	800	600	600	312

Product description (standard execution):

- Made of ductile cast iron EN-GJS 500-7
- UV resistant epoxy coating, EN 14901
- Flange connection according to EN 1092-2 (DIN 2501), pressure PN10, PN16
- Product according to EN 545
- Hygienic certificate PZH for potable water
- Working pressure PN10 / PN16

Application:

In water supply systems, potable water and other chemically inert liquids as well as raw or industrial sewage

We reserve the rights to modify the production program and the given data without separate notices due to the permanent company development

Flanged eccentric reducer Type FFRE

PN10
PN16

SEWAGE

WATER

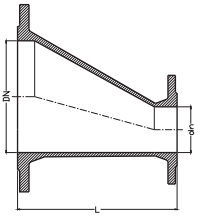

Flanged eccentric reducer Type FFRE 9213

DN	dn	L	Weight
[mm]			[kg]
300	150	300	50
400	150	350	70
500	150	400	120
600	200	600	195

Product description (standard execution):

- Made of ductile cast iron EN-GJS 500-7
- UV resistant epoxy coating EN 14901
- Flange connection according to EN 1092-2 (DIN 2501), pressure PN10, PN16
- Product according to EN 545
- Hygienic certificate PZH for potable water
- Working pressure PN10 / PN16

Application:

In water supply systems, potable water and other chemically inert liquids as well as raw or industrial sewage

Flanged and socket pieces Type E

PN10
PN16

SEWAGE

WATER

Flange and socket pieces E 9217

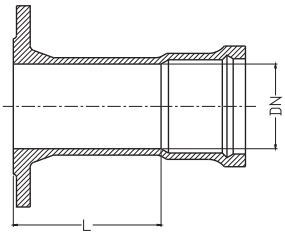

DN	L	Weight
[mm]		[kg]
80	80	9
100	80	11
125	100	15
150	100	18
200	100	24
250	160	35
300	150	45
400	160	67
500	170	82
600	180	110
800	200	210
1000	220	-
1200	240	-

Product description (standard execution):

- Made of ductile cast iron EN-GJS 500-7
- UV resistant epoxy coating EN 14901
- Flange connection according to EN 1092-2 (DIN 2501), pressure PN10, PN16
- Product according to EN 545
- Hygienic certificate PZH for potable water
- Working pressure PN10 / PN16

Application:

In water supply systems, potable water and other chemically inert liquids as well as raw or industrial sewage

We reserve the rights to modify the production program and the given data without separate notices due to the permanent company development

Double flanged spigot Type FF

PN10
PN16

WATER

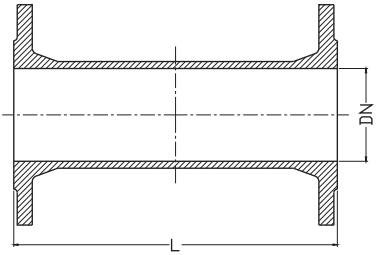

DN	L	Weight	DN	L	Weight
[mm]		[kg]	[mm]		[kg]
50	100	7,8	150	100	15,0
50	200	8,2	150	200	17,0
50	300	8,6	150	300	19,0
50	400	8,8	150	400	20,0
50	500	9	150	500	24,0
65	100	6	150	600	28,0
65	200	8,2	150	700	32,0
65	300	9,2	150	800	34,0
65	500	12,4	150	1000	36,0
65	1000	19,5	200	100	20,0
80	100	7,5	200	200	23,0
80	200	9,0	200	300	27,0
80	300	10,0	200	400	30,0
80	400	12,5	200	500	33,0
80	500	13,0	200	1000	50,0
80	600	15,0	250	200	32,0
80	700	16,0	250	300	36,0
80	800	18,0	250	500	46,0
80	1000	22,0	250	1000	69,0
100	100	9,0	300	200	42,0
100	200	12,0	300	300	48,0
100	300	13,0	300	500	63,0
100	400	14,0	300	1000	89,0
100	500	16,0	400	500	87,0
100	600	18,0	400	1000	155,0
100	700	20,0	500	500	140,0
100	800	22,0	500	1000	198,0
100	1000	28,0	600	500	180,0
125	200	11,0	600	1000	250,0
125	300	16,3	800	500	265,0
125	400	21,7	800	1000	412,0
125	500	27,1			
125	1000	54,0			

Product description (standard execution):

- Made of ductile cast iron EN-GJS 500-7
- UV resistant epoxy coating, EN 14901
- Flange connection according to EN 1092-2 (DIN 2501), pressure PN10, PN16
- Product according to EN 545
- Hygienic certificate PZH for potable water
- Working pressure PN10 / PN16

Application:

In water supply systems, potable water and other chemically inert liquids as well as raw or industrial sewage

Shock absorber
flanged

PN10
PN16

WATER

Shock absorber flanged

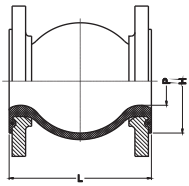

DN		32	40	50	65	80	100	125	150	200	250	300	350	400	450	500	600
L +/- 5	[mm]	95	95	105	115	130	135	170	180	205	240	260	265	265	265	265	265
H	[mm]	69	69	85	106	116,0	150	180	209	260	320	367	408	472	522	570	690
P	[mm]	40	40	52	68	76,0	103	128	152	194	250	300	320	372	415	454	580
Squeeze	[mm]	9	10	10	13	15,0	19	19	20	25	25	25	25	25	25	25	25
Extension	[mm]	6	6	7	7	8	10	12	12	16	16	16	16	16	16	16	16
Shift bias [S]	[mm]	9	9	10	11	12	13	13	14	22	22	22	22	22	22	22	22
Displacement angle [Q]	[°]	15	15	15	15	15	15	15	15	15	15	15	15	15	15	15	15
Weight	[kg]	3,0	3,57	4,11	5,13	6,23	6,98	9,64	12,4	17,3	22,7	29,15	38,9	48,0	55,4	66,0	73,0

Product description (standard execution):

- Flanges made of galvanized steel
- Gasket made of EPDM rubber EN ISO 1629

Application:

Water lines networks: potable water seawater pumping systems heating and air conditioning with max. working pressure PN10/PN16

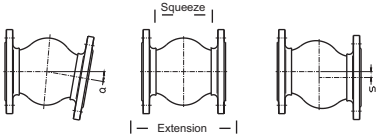

Shock absorber
threaded ends

PN10
PN16

WATER

Shock absorber threaded ends

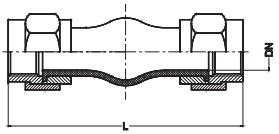

DN	G	$L_{min-max}$	K	Weight
[mm]	[cal]	[mm]	[°]	[kg]
20	3/4"	203 (+/- 22)	32	0,8
25	1"		25	1,1
32	1-1/4"		25	1,4
40	1-1/2"		20	1,7
50	2"		15	2,4

Product description (standard execution):

- Galvanized steel ends
- Gasket made of EPDM rubber EN-ISO 1629

Application:

Water lines networks: potable water seawater pumping systems heating and air conditioning with max. working pressure PN10/PN16

We reserve the rights to modify the production program and the given data without separate notices due to the permanent company development

Cast iron bend with stand Type N
for PE and PVC pipe

PN10
PN16

WATER

DN	D_z	D	K	d	l x n	H_1	H	L	E	Weight
[mm]										[kg]
80	90	200	160	138	18x8(4)*	165	110	212	86	10,7

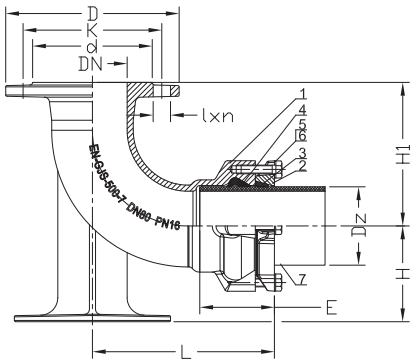

No.	Part	Standard execution
1	Body	Ductile cast iron EN-GJS 500-7 EN 1563
2	Flange	
3	Ring	Brass EN 1982
4	FORSHED ring 575	Rubber EPDM EN-ISO 1629
5	Screw	Stainless steel A2 EN ISO 4017
6	Washer	Stainless steel A2 EN ISO 7091
7	Pipe	PE EN ISO 1872-1

Product description (standard execution):

- Flexible positioning of the pipe with a buffer zone
- The brass clamp ring holds and protects against pipe movements
- Acceptable axial deviation up to ±4°
- Pipe does not move inside the system, which ensures a tight connection
- EPDM sealing approved for potable water, chemically resistant and providing excellent compression and recovery to the original shape
- Sealing and strengthening kit
- Construction pressure of 35 bars according to EN 12842. Operating pressure max 16 bar
- In case of thin-walled PVC pipes, strengthening sleeve should be used inside the pipe
- Epoxy coating minimum 250 microns according to EN 14901
- Flange and seal packed as a set
- 35 bars design pressure according to EN 12842. Working pressure max. 16 bar.

Application:

Water line networks: potable water and other chemically inert fluids. Flanged connectors for naked-end pipes made of PVC or PE
Working pressure up to 1.6 MPa, temperature up to +70°C

Test control:

Water pressure test according to EN 1074-1; EN 12266-1
Seat: 1,1 x PN
Body: 1,5 x PN

We reserve the rights to modify the production program and the given data without separate notices due to the permanent company development

Connection Type S

PN10
PN16

WATER

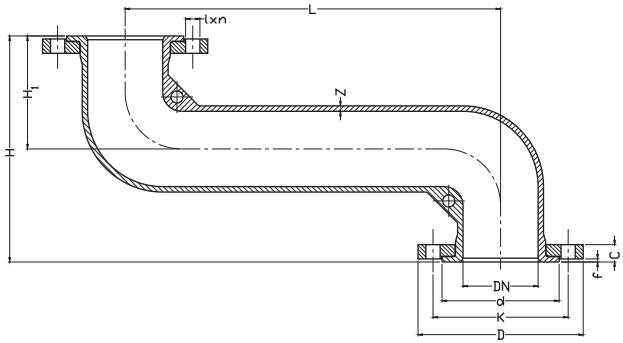

DN	H	H1	L	Z	d	D	K	l	C	f	n
[mm]											-
80	280	140	500	7	132	200	160	19	19	3	8
100	300	150	500	7,2	156	220	180	19	19	3	8
150	400	200	500	7,8	211	285	240	23	19	3	8

Product description (standard execution):

- Made of ductile cast iron EN-GJS 500-7
- Rotary flanges connection
- UV resistant epoxy coating, minimum 250 microns according to EN 14901
- Flange connection according to EN 1092-2 (DIN 2501), pressure PN10, PN16
- Product according to EN 545
- Hygienic certificate PZH for potable water

Application:

In water supply systems, potable water and other chemically inert liquids as well as raw or industrial sewage

Handwheel

WATER SEWAGE GAS

Handwheel 200x17

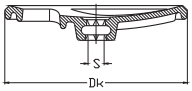

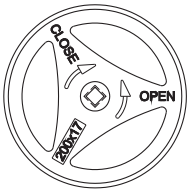

Dk 160-320

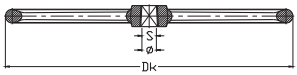

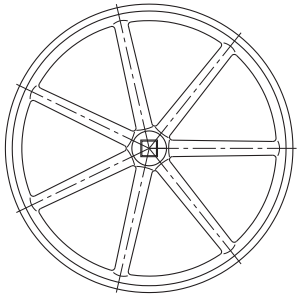

Dk 450-630

Product description (standard execution):

- Made of grey iron EN-GJL-250 / S235JR *
- Screw and washer in set
- Epoxy coating 250 microns in accordance with EN 14091
  UV protection

Application:

For manual operation - mounted directly on the valve spindle

Dk	S	Masa	Dk	S/ϕ	Masa
[mm]		[kg]	[mm]		[kg]
160	12	0,9	450*	24	3,2
200	14	1,3	630*	24	3,8
200	17	1,6	630*	27	3,7
250	17	2,7	630*	32	3,6
250	19	2,7	630*	36	3,6
320	19	4,7	630*	ϕ30	3,8
320	24	4,7			
320	27	4,8			

Lock lever

WATER SEWAGE GAS

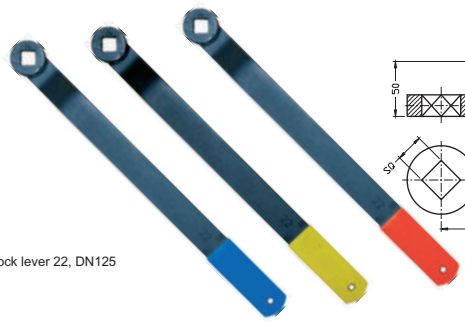

Lock lever 22, DN125

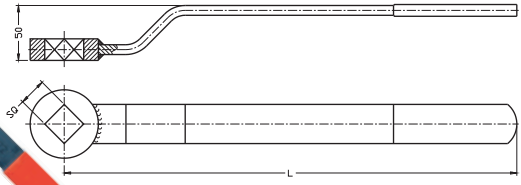

DN	SQ	L
32	11	180
40	11	180
50	17	250
65	17	250
80	22	360
100	22	360
125	22	500
150	27	600

Product description (standard execution):

- Made of steel protected against corrosion
- Lock handle coated by polyvinyl chloride

Application:

For manual operation - mounted directly on the valve spindle

We reserve the rights to modify the production program and the given data without separate notices due to the permanent company development

Dismantling joint F3 type

PN10
PN16

WATER

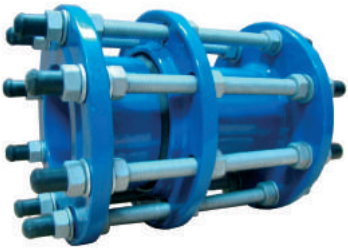

No.	Part	Standard execution
1	Flange	Steel S235JR EN 10025-2 Ductile cast iron EN-GJS 400-15; EN 1563
2	Flange	
3	Flange	
4	Gasket	Rubber EPDM; EN ISO 1629
5	Screw	Steel Fe/Zn5 lub A2 DIN 975; EN ISO 4032; EN ISO 7091
6	Nut	
7	Washer	

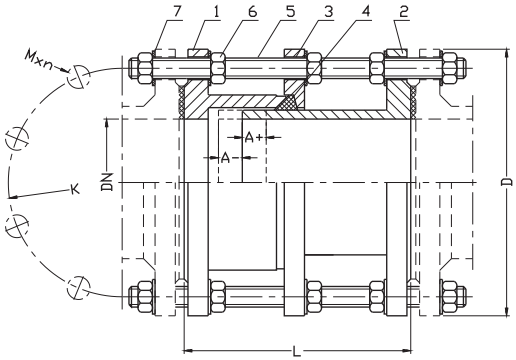

DN	L	A+ / A-	D	K	M	n	Weight
	[mm]					[szt]	[kg]
32	180	25	140	100	16	4	7,5
40	180	25	150	110	16	4	9,5
50	180	25	165	125	16	4	11,0
65	180	25	185	145	16	4	13,0
80	200	25	200	160	16	8	17,0
100	200	25	220	180	16	8	21,0
125	200	25	250	210	16	8	26,0
150	200	25	285	240	20	8	35,0
175	220	25	315	270	20	8	44,0
200	220	25	340	295	20	8	49,0
250	220	25	395	350	20	12	65,0
300	220	25	445	400	20	12	73,0
350	230	25	505	460	20	16	97,0
400	230	25	565	515	24	16	125,0
450	250	25	615	565	24	20	140,0
500	260	25	670	620	24	20	162,0
550	260	25	730	675	27	20	195,0
600	260	25	780	725	27	20	205,0
650	260	25	835	780	27	24	237,0
700	260	25	895	840	27	24	260,0
800	290	25	1015	950	30	24	355,0
900	290	25	1115	1050	30	28	408,0
1000	290	25	1230	1160	33	28	450,0
1100	300	25	1340	1270	33	32	585,0
1200	320	25	1455	1380	36	32	750,0
1300	340	25	1575	1490	39	32	912,0
1400	360	25	1675	1590	39	36	1035,0
1500	380	25	1785	1700	39	36	1162,0
1600	390	25	1915	1820	45	40	1520,0
1800	400	25	2115	2020	45	44	1830,0
2000	410	25	2325	2230	45	48	2280,0
2200	430	25	2550	2440	52	52	2790,0
2400	440	25	2760	2650	52	56	3510,0

Product description (standard execution):

- Flanges made of ductile cast iron EN-GJS 400-15 and steel 1.0038
- EPDM sealing
- Galvanized steel or stainless steel bolts
- Epoxy coating EN 14901
- Product marking according to EN 19; EN 1074
- Flanges by EN 1092-2 (DIN 2501) pressure PN10; PN16

Application:

Water line networks: potable water and other chemically inert fluids. Designed to support installation and removal of pipe fittings.
Working pressure up to 1.6 MPa, temperature up to +70°C

Test control:

Water pressure test according to EN 1074-1; EN 1074-2; EN 12266-1
Seat: 1,1 x PN
Body: 1,5 x PN

Street boxes

PN10
PN16

WATER

Box for gate valve; 9501-PEHD-GJL

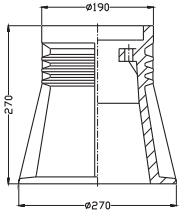

Material	Body PEHD
	Bonnet - Grey iron
Weight	4,0 [kg]
Comment	Dimension by DIN 4056
	Marking on the bonnet "W" EN M-74081

Box for hydrant; 9502-PEHD-GJL

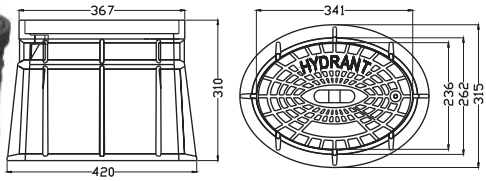

Material	Body PEHD
	Bonnet - Grey iron
Weight	10,0 [kg]
Comment	Dimension by DIN 4055
	Marking on the bonnet HYDRANT EN M-74081

Box for house connectors; 9503-PEHD-GJL

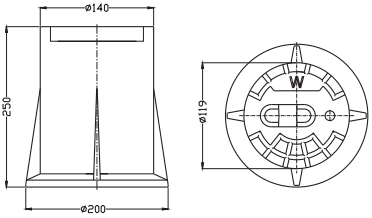

Material	Body PEHD
	Bonnet - Grey iron
Weight	2,5 [kg]
Comment	Dimension by DIN 4057
	Marking on the bonnet W

Product description (standard execution):

- PEHD body - light weight
- No corrosion; longer service life; no maintenance
- Cover made of gray iron
- High resistance for load
- High positive and negative temperature resistant - frostproof
- Body design provides stable foundation in the ground
- Cover lifting eye

Application:

As an element of underground installation, intended to protect and enchance acces to other accessories.

Versions:

Stainless steel bolts
Ductile iron covers

Box for gate valve; 9501-GJL-GJL

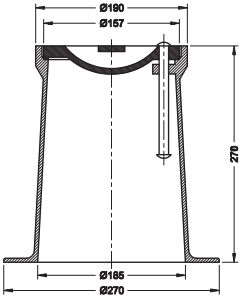

Box for hydrant TYP 4055
Body - grey iron EN-GJL-250; EN 1561
Civer - grey iron EN-GJL-250; EN 1561
ductile cast iron EN-GJS 400-15; EN 1563
cover marking "W"
Weight: 10 kg

Cover lifting eye
Bitumen coating

Box for hydrant; 9502-GJL-GJL

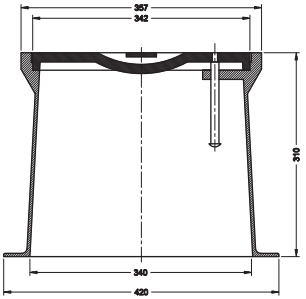

Box for hydrant TYP 4055
Body - grey iron EN-GJL-250; EN 1561
Civer - grey iron EN-GJL-250; EN 1561
ductile cast iron EN-GJS 400-15; EN 1563
cover marking "H"
Weight: 30 kg

Cover lifting eye
Bitumen coating

Box for house connector; 9504-PEHD-GJL; 9504-PEHD-PEHD

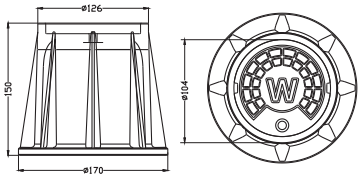

Material	Body PEHD
	Bonnet - Grey iron/PEHD
Weight	1,5/2,0 [kg]
Comment	Marking on the bonnet W

Box for house connector H=150; 9504-GJL-GJL

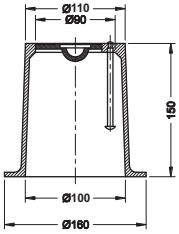

Box for house connector
Body - grey iron EN-GJL-250; EN 1561
Cover - grey iron EN-GJL-250; EN 1561
ductile cast iron EN-GJS 400-15; EN 1563
Weight: 6 kg

We reserve the rights to modify the production program and the given data without separate notices due to the permanent company development

Box for gate valve with length regulation; 9509-PEHD-GJL

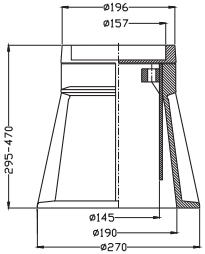

Material	Body PEHD
	Bonnet - Grey iron
Weight	7,9 [kg]
Comment	Dimension by DIN 4056
	Marking on the bonnet W EN M-74081

Sleeper plate: 9521-PEHD i 9522-PEHD

To street box:

9501-PEHD-GJL
9503-PEHD-GJL
9504-PEHD-PEHD/GJL
9509-PEHD-GJL

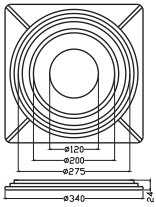

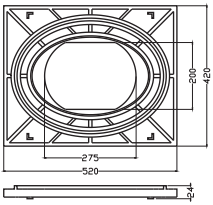

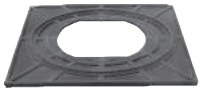

To street box:

9502-PEHD-GJL
9502-GJL-GJL

Mounting instruction:

Please check the compatibility with the order before mounting and its intended purpose. Prepare the surface of the hole and pay attention to its depth. Street boxes should be installed directly in natural subsoil or sandy ballast depending on ground conditions.
In order to ensure proper installation it is recommended to use sleeper plate to the street boxes

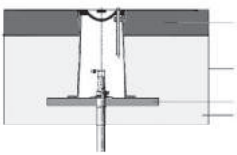

Mounting instruction:

1. Dig a hole
2. Align the excavation bottom, remove large and sharp stones.
3. Prepare layers that are not compacted with sand a thickness of 5 cm
4. Match a sleeper plate to the suitable street box
5. Place the street box in a sleeper plate
6. Gradually sprinkle a sleeper plate layers and compact around the perimeter of the street box.
7. Provide adequate degree of compaction to existing ground conditions and subsequent load external.
8. Enclose the street box by cement or cube

By-pass
for soft valve gates

PN10
PN16

WATER

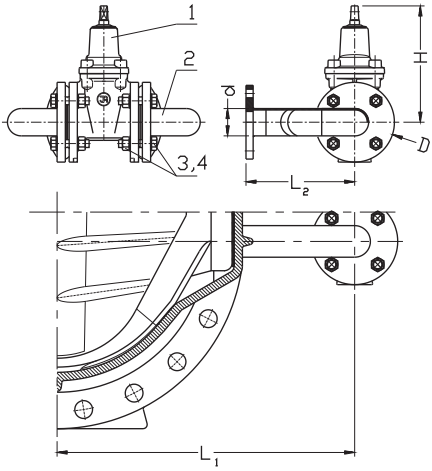

By-pas	d	D	L_2	L_1	H	DN
[DN]	[mm]					
40	47	150	214	460	220	400
40	53	150	214	480	230	450
50	67	165	230	510	265	500
65	67	185	240	580	265	600

No	Part	Standard execution
1	Gate valve 2111	Producer catalog
2	By-pass	Steel 235JR
3	Screw	Steel Fe/Zn5, Steel A2 EN ISO 4017
4	Nut	Steel Fe/Zn5, Steel A4 EN ISO 4032
5	Washer	Steel Fe/Zn5, Steel A2 EN ISO 7091

Product description (standard execution):

- Flanges and pipes made of S235JR steel
- Bypass shape adapted to the fitting length of the valve
- Galvanized or stainless steel mounting screws
- Epoxy coating, minimum 250 microns according to EN 14901

Application:

In water supply, drinking water, sewage and other neutral fluids in the temperature range up to + 70 ° C. As an element of differential pressure compensation at the opening or closing of, for example, the valve

Test control:

Pressure test with water in accordance with EN 1074-1, EN 1074-2, EN 12266-1
body strength 1.5 x PN
leak tightness 1.1 x PN

Instalation:

Directly on the valve in a vertical position

Pipes and fittings support

WATER | SEWAGE | GAS

9610

To the collar
DN80-DN150

9611

For pipes
DZ90, DZ110,
DZ160, DZ220

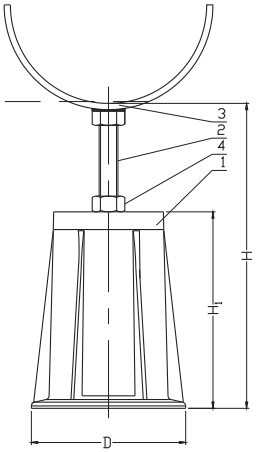

H	H_1	D
min-max		
[mm]		
340-530	250	Ø200
510-700		
670-850		

No.	Part	Standard execution
1	Support	PEHD
2	Receiver load	Steel Fe/Zn5; Stainless steel A2 EN ISO 4032
3	Saddle	Steel Fe/Zn5; Stainless steel 1.4301 EN ISO 4032
4	Nut	Steel Fe/Zn5; Stainless steel A2 EN ISO 4032

Product description (standard execution):

- PEHD body - hydraulic shock/vibration compensation
- Easy height adjustment in the range from 340 to 850mm (other height on request)
- Standard load capacity 15kN (other on request)
- Wide range of saddle:
  - flange bases TYPE 9610
  - Arch for standard pipe sizes TYPE 9611
  - Individual base made in 3D technology for dedicated 9612 TYPE fittings
- Galvanized steel or stainless steel metallic parts
- Saddle blocking nut

Application:

Support for pipes and fittings for use in the installation of various types of pipelines requiring adequate support, which will meet the requirements of building and ensure proper access to equipment.

Installation:

Pipe and fitting support should be placed on cement foundation.
For unstable ground PEHD sleeper plate should be used – fig 9521-PEHD

We reserve the rights to modify the production program and the given data without separate notices due to the permanent company development

Resilient seated gate valve for gas
flanged

PN10
PN16

GAS

Gate valve 2302 DN80

Gate valve 2311 DN100

Packing cork protected against unscrewing and fully covered by additional cleaning gasket

Horizontal and vertical double spindle bearing

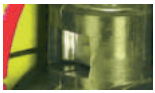

Replaceable wedge nut

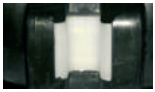

Application of low friction sliding element

Product description (standard execution):

- Body bonnet and wedge made of ductile cast iron EN-GJS 400-15
- Full bore gate valve
- NBR fully vulcanised wedge
- Application of low friction sliding element
- Wedge nut made of forged brass - replaceable
- Stainless steel spindle with rolled thread
- Low friction double spindle bearing acting both horizontal and vertical way
- O-ring spindle sealing packing cork protected against contact with medium
- Under pressure replaceable packing cork
- Forged packing cork protected against unscrewing
- Packing cork protected against dirt penetration
- Body bonnet Zinc coated screws protected by wax
- Epoxy coating minimum 250 microns according to EN 14901 GSK RAL certificate
- Product according to EN 13774
- Flange connection according to EN 1092-2; (DIN 2501) pressure PN10; PN16
- Face to face according to EN 558-A1 F5 (DIN 3202) – catalogue number 2302
- Face to face according to EN 558-A1 F4 (DIN 3202) – catalogue number 2311
- Product marking according to EN 19; EN 1171

Application:

Gas lines networks.
Working conditions:
temp. from -20˚C up +60˚C
pressure up to 1,6 MPa

Execution variant:

Ductile cast iron EN-GJS 350-22 LT temp. from -30˚C
SS body and bonnet screws
With ISO top flange for actuator
With electric or pneumatic actuator - see: 2931, 2932
With inductive or electromechanical sensor
With opening indicator

Test control:

Water pressure test according to EN 1074-1, EN 1074- 2, EN 12266-1
Seat: 1,1 x PN;
Body: 1,5 x PN
Air pressure test according to EN 12266-1
Seat: 1,1 x PN;
Body: 1,1 x PN
Operation torque test.

Installation:

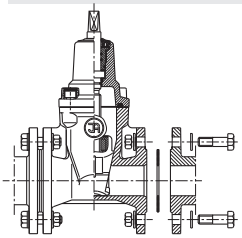

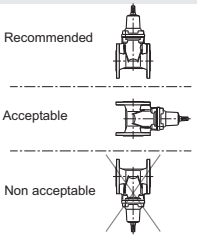

Accessories:

Extension spindle - see: 9006, 9007
Extension spindle with position inducator - see 9020, 9021
Pillar with handwheel - see: 9113
Pillar for electric actuator - see: 9114
Handwheel - see: 9301
Street box - see: 9505, 9506, 9507, 9508

2302
2311

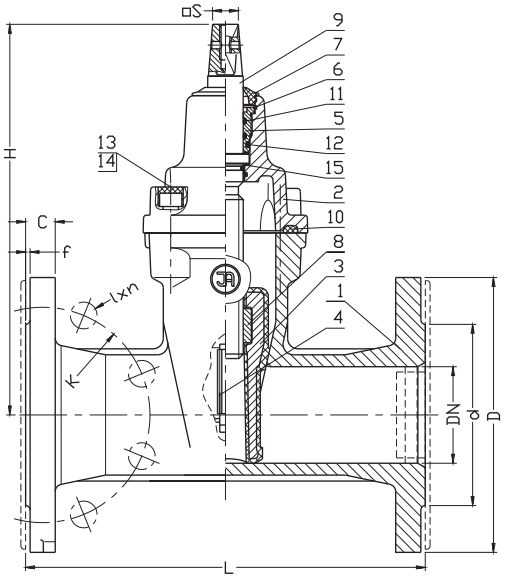

No.	Part	Standar execution
1	Body	Ductile cast iron EN-GJS-400-15 or EN-GJS-350-22-LT EN 1563
2	Bonnet	Ductile cast iron EN-GJS-400-15 or EN-GJS-350-22-LT EN 1563
3	Wedge	Brass CW617N PN-EN 12165 (DN32) Ductile cast iron (DN40-DN350) EN-GJS-400-15 or EN-GJS-350-22-LT EN 1563 Rubber NBR acc.to: EN ISO 1629
4	Wedge slider	Tarnoform 300 EN ISO 1874-1
5	Packing cork	Brass CW617N EN 12165
6	Protection ring	Steel 1.1260
7	Cleaning gasket	Rubber NBR EN ISO 1629
8	Spindle nut	Brass CW617N EN 12165
9	Spindle	Stainless steel 1.4021 EN 10088-1
10	Body-bonnet gasket	Rubber NBR EN ISO 1629
11 12	O-Ring	Rubber NBR EN ISO 1629
13	Screw	Steel Fe/Zn5, stainless steel EN ISO 4762
14	Screw stopper	Wax
15	Washer	Tarnoform 300 EN ISO 1874-1

- other material variants on special request

DN	2311 L	2302 L	H	d PN16 (PN10)	D PN16 (PN10)	K PN16 (PN10)	l PN16 (PN10)	C	f	n PN16 (PN10)	Turns for full open	S	Weight	Weight
[mm]										-		[mm]	2311 [kg]	2302 [kg]
32	130	-	145	76	140	100	19	18	3	4	9	12	5	-
40	140	240	220	84	150	110	19	19	3	4	11	14	9	10
50	150	250	230	99	165	125	19	19	3	4	13,5	14	10	11
65	170	270	265	118	185	145	19	19	3	4	14	17	14	16
80	180	280	290	132	200	160	19	19	3	8	17	17	15	17
100	190	300	325	156	220	180	19	19	3	8	21	19	21	23
125	200	325	365	184	250	210	19	19	3	8	26	19	31	39
150	210	350	457	211	285	240	23	19	3	8	26	19	41	48
200	230	400	534	266	340	295	23	20	3	12 (8)	34,5	24	62	77
250	250	450	633	319	405	355 (350)	28 (23)	22	3	12	42,5	27	94	106
300	270	500	708	370	460	410 (400)	28 (23)	25	4	12	51	27	122	148
350	290	550	790	429	520	470 (460)	28 (23)	27	4	16	60	27	216	254

We reserve the rights to modify the production program and the given data without separate notices due to the permanent company development.

Resilient seated gate valve for gas
flanged

PN10
PN16

GAS

Gate valve 2311 DN500

Product description (standard execution):

- Body bonnet and wedge made of ductile cast iron EN-GJS 400-15
- Full bore gate valve
- NBR fully vulcanised wedge
- Application of low friction sliding element
- Wedge nut made of forged brass - replaceable
- Stainless steel spindle with rolled thread
- Low friction double spindle bearing acting both horizontal and vertical way
- O-ring spindle sealing packing cork protected against contact with medium
- Packing cork protected against dirt penetration
- Body bonnet Zinc coated screws protected by wax
- Epoxy coating minimum 250 microns according to EN 14901, GSK RAL certificate
- Product according to EN 13774
- Flange connection according to EN 1092-2; (DIN 2501) pressure PN10; PN16
- Face to face according to EN 558-A1 F5 (DIN 3202) – catalogue number 2302
- Face to face according to EN 558-A1 F4 (DIN 3202) – catalogue number 2311
- Product marking according to EN 19; EN 1171

Application:

Gas lines networks.
Working conditions:
temp. from -20˚C up +60˚C
pressure up to 1,6 MPa

Execution variant:

Ductile cast iron EN-GJS 350-22 LT temp. from -30˚C
SS body and bonnet screws
With ISO top flange for actuator
With electric or pneumatic actuator - see: 2931, 2932
With inductive or electromechanical sensor
With opening indicator

Test control:

Water pressure test according to EN 1074-1, EN 1074- 2, EN 12266-1
Seat: 1,1 x PN;
Body: 1,5 x PN
Air pressure test according to EN 12266-1
Seat: 1,1 x PN;
Body: 1,1 x PN
Operation torque test.

Installation:

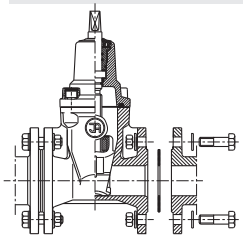

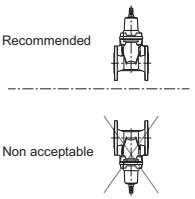

Accessories:

Extension spindle - see: 9006, 9007
Extension spindle with position inducator - see 9020, 9021
Pillar with handwheel - see: 9113
Pillar for electric actuator - see: 9114
Handwheel - see: 9301
Street box - see: 9505, 9506, 9507, 9508

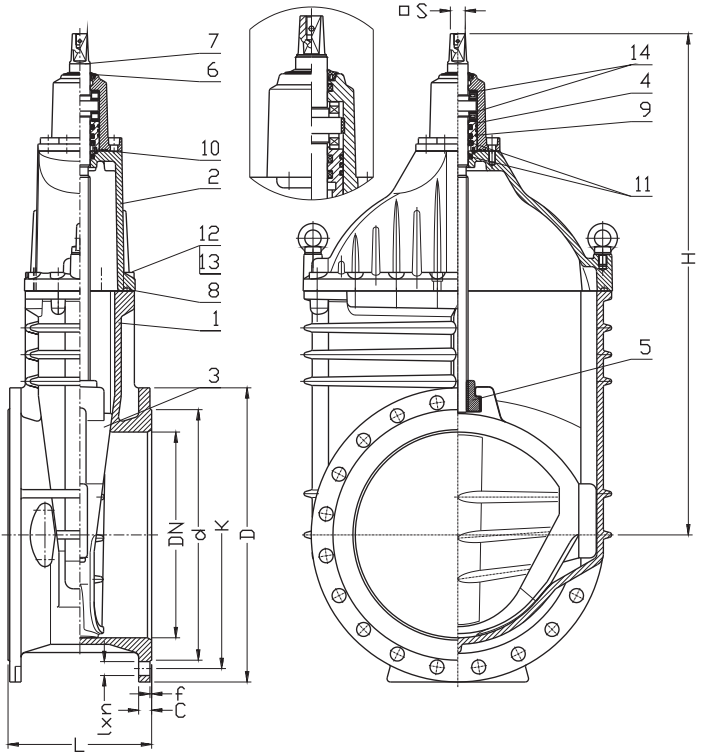

No.	Part	Material	No.	Part	Material
1	Body	Ductile cast iron EN-GJS-400-15, EN-GJS-350-22-LT EN 1563	7	Spindle	Steel 1.4021 EN 10088-1
2	Bonnet	Ductile cast iron EN-GJS-400-15, EN-GJS 350-22-LT EN 1563	8	Body-bonnet gasket	Rubber NBR ISO 1629
3	Wedge + slider	Ductile cast iron EN-GJS-400-15, EN-GJS 350-22-LT EN 1563 Rubber NBR: ISO 1629 Tarnoform 300 EN ISO 1874-1	9,10, 11	O-Ring	Rubber NBR ISO 1629
4	Sealing sleeve	Brass CW617N EN 12165	12	Screw	Steel Fe/Zn5, stainless steel EN ISO 4762
5	Spindle nut	Brass CW617N EN 12165	13	Screw stopper	Wax
6	Cleaning gasket	Rubber NBR ISO 1629	14	Bearing	Catalogue producer

DN	2111 L	2002 L	H	d PN16 (PN10)	D PN16 (PN10)	K PN16 (PN10)	l PN16 (PN10)	C	f	n PN16 (PN10)	Turn for full open	S	Weight [kg]	
[mm]										-		[mm]	2311	2302
400	310	600	1020	480	580	525 (515)	31 (28)	28	4	16	58	32	298	345
450	330	-	1090	548 (530)	640	585 (565)	31 (28)	30	4	20	65	32	350	-
500	350	700	1220	609 (582)	715 (670)	650 (620)	34 (28)	32	4	20	63	36	458	540
600	390	800	1390	720 (682)	840 (780)	770 (725)	37 (31)	36	5	20	77	36	640	776

We reserve the rights to modify the production program and the given data without separate notices due to the permanent company development.

Resilient seated gate valve for gas
with PE pipe ends

PN10

GAS

With Protegol coating

Gate valve DN100

Packing cork protected against unscrewing and fully covered by additional cleaning gasket

Horizontal and vertical double spindle bearing

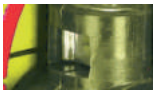

Replaceable wedge nut

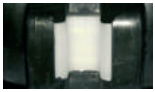

Application of low friction sliding element

Product description (standard execution):

- Body bonnet and wedge made of ductile cast iron EN-GJS 400-15
- Full bore gate valve
- NBR fully vulcanised wedge
- Application of low friction sliding element
- Wedge nut made of forged brass - replaceable
- Stainless steel spindle with rolled thread
- Low friction double spindle bearing acting both horizontal and vertical way
- O-ring spindle sealing packing cork protected against contact with medium
- Under pressure replaceable packing cork
- Forged packing cork protected against unscrewing
- Packing cork protected against dirt penetration
- Body bonnet Zinc coated screws protected by wax
- Epoxy coating minimum 250 microns according to EN 14901 GSK RAL certificate
- Product according to EN 13774
- End connectors made of PE pipe 100 SDR 11
- The PE pipe end connectors enables direct welding into PE pipes
- PE/Steel connection sealed with a plastic shrink hose ring
- Product marking according to EN 19; EN 1171

Application:

Gas lines networks.
Working conditions:
temp.from -10˚C up +40˚C
pressure up to 1 MPa

Execution variant:

SS body bonnet screws
Connectors adapted for PE 100 SDR17
With Protegol coating

Test control:

Water pressure test according to EN 1074-1, EN 1074- 2, EN 12266-1
Seat: 1,1 x PN;
Body: 1,5 x PN
Air pressure test according to EN 12266-1
Seat: 1,1 x PN;
Body: 1,1 x PN
Operation torque test.

Accessories:

Extension spindle - see: 9006, 9007
Pillar with handwheel - see: 9113
Extension spindle with position inducator - see 9020, 9021
Pillar for electric actuator - see: 9114
Street box - see: 9505, 9506, 9507, 9508

Installation:

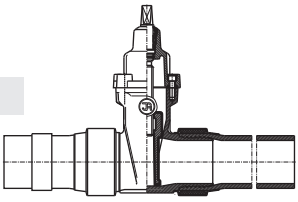

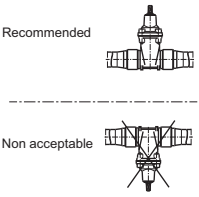

2312

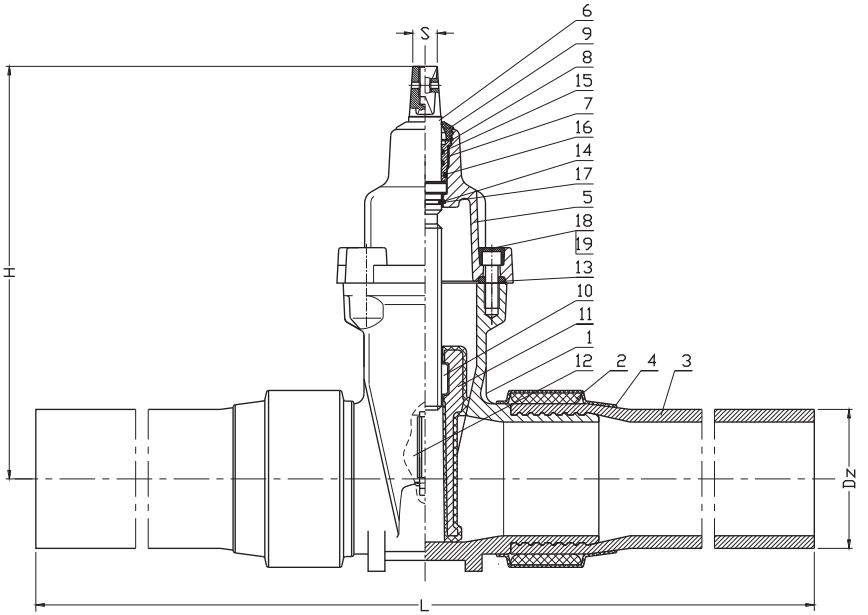

DN	H	Dz	L	S	Turns for full open	Weight
[mm]						[kg]
25	130	32	800	12	7,5	4
32	145	40	800	12	9	5
40	220	50	850	14	11	6
50	230	63	850	14	13,5	11
65	265	75	860	17	14	13
80	290	90	860	17	17	21
100	325	110	900	19	21	24
125	365	125	1100	19	26	33
150	457	160	1100	19	26	49
150	457	180	1100	19	26	52
200	534	200	1100	24	34,5	76
200	534	225	1100	24	34,5	80
250	633	250	1200	27	42,5	102
250	633	280	1200	27	42,5	110
300	708	315	1300	27	51	150
300*	708	355	1300	27	51	175

* On request

No.	Part	Standard execution
1	Body	Ductile cast iron EN-GJS-400-15 EN 1563
2	Clamping ring	Steel 1.0037 EN 10025-2
3	PE pipe ends	PE 100 SDR 11 EN 1555-2
4	Shrink hose ring	Plastic
5	Bonnet	Ductile cast iron EN-GJS-400-15 EN 1563
6	Spindle	Stainless steel 1.4021 EN 10088-1
7	Packing cork	Brass CW617N EN 12165
8	Protection ring	Steel 1,1260
9	Cleaning gasket	Rubber NBR EN ISO 1629
10	Spindle nut	Brass CW617N EN 12165
11	Wedge	Brass CW617N EN 12165 (DN25-32) Ductile cast iron (DN40-DN300) EN-GJS-400-15 EN 1563 rubber NBR acc. to: EN ISO 1629
12	Wedge slider	Tarnoform 300 EN-ISO 1874-1
13	Body-bonnet gasket	Rubber NBR EN ISO 1629
14 17	O-ring	Rubber NBR EN ISO 1629
18	Screw	Steel Fe/Zn5, stainless steel EN ISO 4762
19	Screw stopper	Wax

- other material variants on special request

We reserve the rights to modify the production program and the given data without separate notices due to the permanent company development.

Resilient seated gate valve for gas
with steel spigot ends

PN10
PN16

GAS

With Protegol coating

Gate valve DN80

Packing cork protected against unscrewing and fully covered by additional cleaning gasket

Horizontal and vertical double spindle bearing

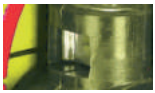

Replaceable wedge nut

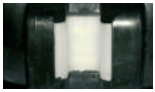

Application of low friction sliding element

Product description (standard execution):

- Cast Steel Body
- Bonnet and wedge made of ductile cast iron EN-GJS 350-22 LT
- Full bore gate valve
- NBR fully vulcanised wedge
- Application of low friction sliding element
- Wedge nut made of forged brass - replaceable
- Stainless steel spindle with rolled thread
- Low friction double spindle bearing acting both horizontal and vertical way
- O-ring spindle sealing, packing cork protected against contact with medium
- Under pressure replaceable packing cork
- Forged packing cork protected against unscrewing
- Packing cork protected against dirt penetration
- Body bonnet Zinc coated screws protected by wax
- Epoxy coating minimum 250 microns according to EN 14901 GSK RAL certificate
- Product according to EN 13774
- Pipe connectors made of steel pipe for flammable media transmit
- Product marking according to EN 19, EN 1171

Application:

Gas lines networks.
Working conditions:
Temp. from -30˚C up +60˚C
pressure up to 1,6 MPa

Test control:

Water pressure test according to EN 1074-1, EN 1074- 2, EN 12266-1
Seat: 1,1 x PN;
Body: 1,5 x PN
Air pressure test according to EN 12266-1
Seat: 1,1 x PN;
Body: 1,1 x PN
Operation torque test.

Accessories:

Extension spindle - see: 9006, 9007
Extension spindle with position inducator - see 9020, 9021
Pillar with handwheel - see: 9113
Pillar for electric actuator - see: 9114
Handwheel - see: 9301
Street box - see: 9505, 9506, 9507, 9508

Execution variant:

SS body and bonnet screws
With ISO top flange for actuator
With electric or pneumatic actuator
With inductive or electromechanical sensor
With opening indicator
With Protegol coating

Installation:

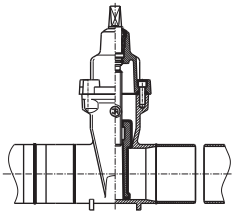

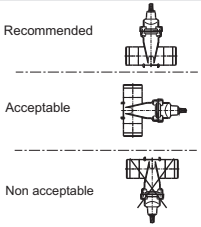

2314

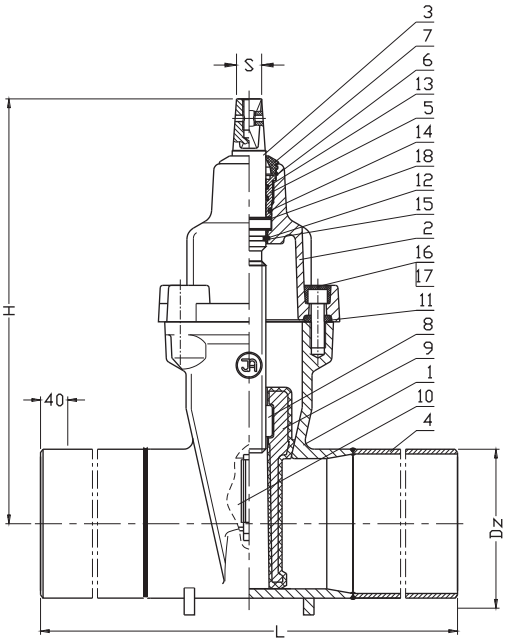

No.	Part	Standard execution
1	Body	Cast steel G20Mn5N EN 10213
2	Bonnet	Ductile cast iron EN-GJS-350-22-LT EN 1563
3	Spindle	Stainless steel 1.4021 EN 10088-1
4	Pipe ends	Steel 1.0582 (L360 NB) EN ISO 3183
5	Packing cork	Brass CW617N EN 12165
6	Protection ring	Steel 1.1260
7	Cleaning gasket	Rubber NBR EN ISO 1629
8	Spindle nut	Brass CW617N EN 12165
9	Wedge	Ductile cast iron EN-GJS-350-22-LT EN 1563 Rubber NBR acc. to: EN ISO 1629
10	Wedge slider	Tarnoform 300 EN-ISO 1874-1
11	Body-bonnet gasket	Rubber NBR EN ISO 1629
12 15	O-ring	Rubber NBR EN ISO 1629
16	Screw	Steel Fe/Zn5, stainless steel EN ISO 4762
17	Screw stopper	Wax
18	Washer	Tarnoform 300 EN ISO 1874-1

- other material variants on special request

DN	H	Dz	L	S	Turns for full open	Weight
[mm]						[kg]
50	230	60,3	570	14	13,5	9
80	290	88,9	550	17	17	16
100	325	108,0	520	19	21	18
100	325	114,3	520	19	21	19
150	457	159,0	530	19	26	43
150	457	168,3	530	19	26	45
200	534	219,1	570	24	34,5	68
250	633	273,0	590	27	42,5	95
300	708	323,9	620	27	51	120

We reserve the rights to modify the production program and the given data without separate notices due to the permanent company development.

Resilient seated gate valve for gas
with electric actuator flanged

PN10
PN16

GAS

Gate valve 2931 DN80

Horizontal and vertical double spindle bearing

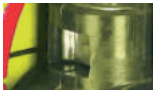

Replaceable wedge nut

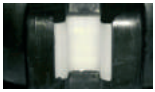

Application of low friction sliding element

Product description (standard execution):

- Body bonnet and wedge made of ductile cast iron EN-GJS 400-15
- Full bore gate valve
- NBR fully vulcanised wedge
- Application of low friction sliding element
- Wedge nut made of forged brass - replaceable
- Stainless steel spindle with rolled thread
- Low friction double spindle bearing acting both horizontal and vertical way
- O-ring spindle sealing, packing cork protected against contact with medium
- Forged packing cork protected against unscrewing
- Packing cork protected against dirt penetration
- Body bonnet Zinc coated screws protected by wax
- Epoxy coating minimum 250 microns according to EN 14901 ,GSK RAL certificate
- Product according to EN 13774
- Flange connection according to EN 1092-2 (DIN 2501), pressure PN10, PN16
- Flange for drive assembly in accordance with ISO 5210
- Face to face according to EN 558-A1 F5 (DIN 3202) – catalogue number 2932
- Face to face according to EN 558-A1 F4 (DIN 3202) – catalogue number 2931
- Product marking according to EN 19, EN 1171

Application:

Gas lines networks.
Working conditions:
temp.from -20˚C up +60˚C
pressure up to 1,6 MPa

Execution variant:

Ductile cast iron EN-GJS 350-22-LT (-30ºC)
With SS body bonnet screws

Test control:

Water pressure test according to EN 1074-1, EN 1074- 2, EN 12266-1
Seat: 1,1 x PN;
Body: 1,5 x PN
Air pressure test according to EN 12266-1
Seat: 1,1 x PN;
Body: 1,1 x PN
Operation torque test.

Accessories:

Electric multi-turn explosion proof actuators - version EX
Pneumatic actuator

Installation:

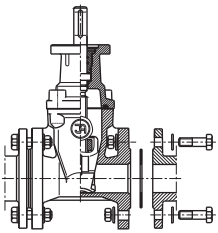

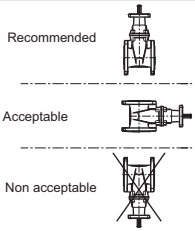

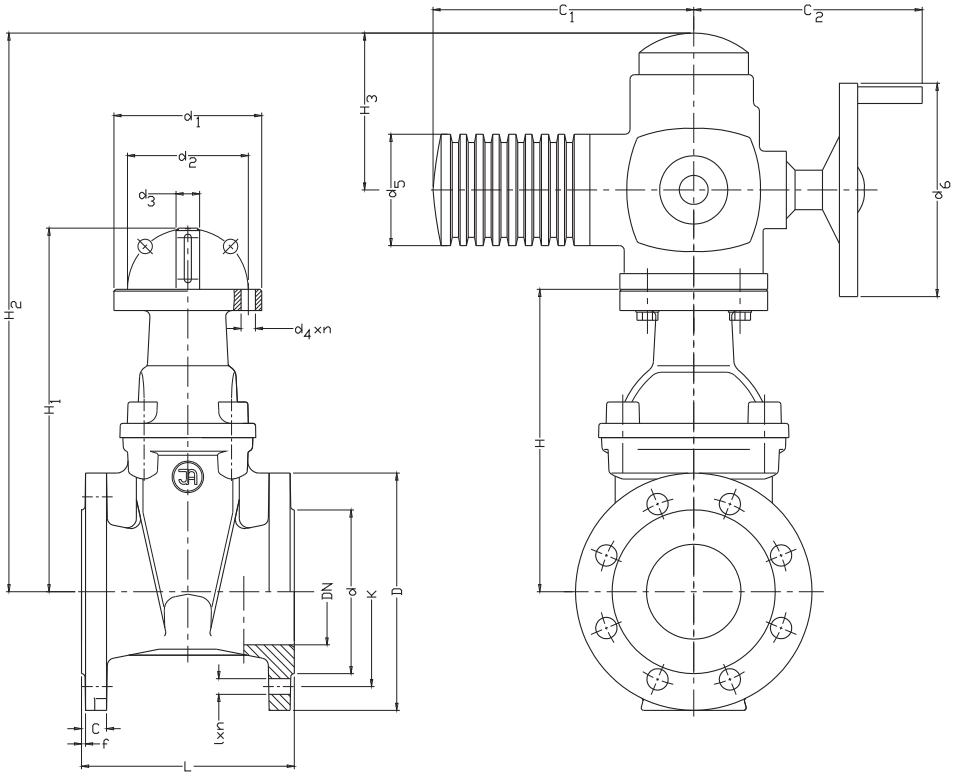

DN	2931 L	2932 L	C	f	D	d	K	l	n	C_1	C_2	d_1	d_2	d_3	d_4 x n	d_5	d_6	H	H_1	H_2	H_3	AUMA top of flange / Clamping force / number of turns		Weight 2931	Weight 2932
							PN16 (PN10)																		
[mm]									-	[mm]												Saxx.x-Fx / [Nm] / ---		[kg]	
40	140	240	19	3	150	84	110	19	4	265	250	90	70	16	9x4	105	160	188	238	461	170	SA 7.2-F7	10-30	11	34	37
50	150	250	19	3	165	99	125	19	4	265	250	90	70	16	9x4	105	160	198	248	471	170	SA 7.2-F7	10-30	13,5	35	38
65	170	270	19	3	185	118	145	19	4	282	256	125	102	20	11x4	125	200	232	283	507	170	SA 7.6-F10	20-60	14	49	52
80	180	280	19	3	200	132	160	19	8	282	256	125	102	20	11x4	125	200	255	307	530	170	SA 7.6-F10	20-60	17	50	54
100	190	300	19	3	220	156	180	19	8	282	256	125	102	20	11x4	125	200	290	346	565	170	SA 7.6-F10	20-60	21	56	59
125	200	325	19	3	250	184	210	19	8	282	256	125	102	20	11x4	125	200	329	385	604	170	SA 10.2-F10	40-120	26	72	80
150	210	350	19	3	285	211	240	23	8	282	256	125	102	20	11x4	125	200	400	457	675	170	SA 10.2-F10	40-120	26	82	89
200	230	400	20	3	340	266	295	23	12 (8)	282	256	125	102	20	11x4	125	200	475	538	750	170	SA 10.2-F10	40-120	34,5	103	118
250	250	450	22	3	405	319	355 (350)	28 (23)	12	385	325	175	140	30	18x4	153	315	560	625	875	180	SA 14.2-F14	100-250	42,5	153	167
300	270	500	25	4	460	370	410 (400)	28(23)	12	385	325	175	140	30	18x4	153	315	635	700	950	180	SA 14.2-F14	100-250	51	181	208
350	290	550	27	4	520	429	470 (460)	28(23)	16	385	325	175	140	30	18x4	153	315	720	785	1033	180	SA 14.6-F14	300-500	60	276	314

We reserve the rights to modify the production program and the given data without separate notices due to the permanent company development.

Resilient seated gate valve for gas
with electric actuator flanged

PN10
PN16

GAS

Gate valve 2931 DN500

Product description (standard execution):

- Body bonnet and wedge made of ductile cast iron EN-GJS 400-15; EN-GJS 500-7
- Monolithic ISO top flange
- Full bore gate valve
- NBR fully vulcanised wedge
- Application of low friction sliding element
- Wedge nut made of forged brass - replaceable
- Stainless steel spindle with rolled thread
- Low friction double spindle bearing acting both horizontal and vertical way
- O-ring spindle sealing packing cork protected against contact with medium
- Forged packing cork protected against unscrewing
- Body bonnet Zinc coated screws protected by wax
- Epoxy coating minimum 250 microns according to EN 14901, GSK RAL certificate
- Product according to EN 13774
- Flange connection according to EN 1092-2 (DIN 2501) pressure PN10; Pn16
- Flange for drive assembly in accordance with ISO 5210
- Face to face according to EN 558-A1 F5 (DIN 3202) – catalogue number 2932
- Face to face according to EN 558-A1 F4 (DIN 3202) – catalogue number 2931
- Product marking according to EN 19; EN 1171

Application:

Gas lines networks.
Working conditions:
temp.from -20˚C up +60˚C
pressure up to 1,6 MPa

Execution variant:

Ductile cast iron EN-GJS 350-22-LT (-30ºC)
With SS body bonnet screws

Test control:

Water pressure test according to EN 1074-1, EN 1074- 2, EN 12266-1
Seat: 1,1 x PN;
Body: 1,5 x PN
Air pressure test according to EN 12266-1
Seat: 1,1 x PN;
Body: 1,1 x PN
Operation torque test.

Accessories:

Electric multi-turn explosion proof actuators - version EX
Pneumatic actuator

Installation:

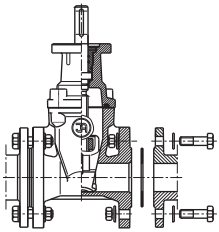

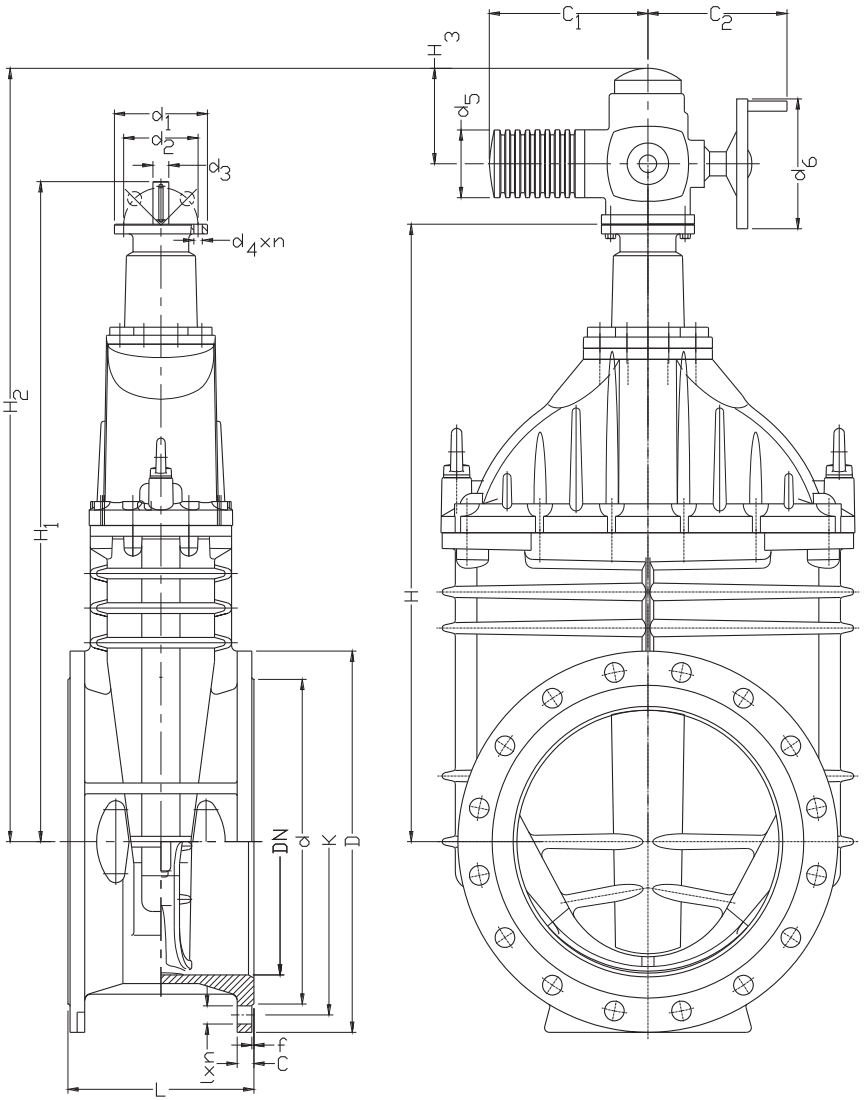

DN	2931 L	2932 L	C	f	D	d	K	l	n	C_1	C_2	d_1	d_2	d_3	$d_4 \times n$	d_5	d_6	H	H_1	H_2	H_3	AUMA type of flange / Clamping force / number of turns			Weight 2931	Weight 2932
							PN16 (PN10)																				
[mm]									-	[mm]												Saxx.x-Fx / [Nm] / ---			[kg]	
400	310	600	28	4	580	480	525 (515)	31 (28)	16	385	332	175	140	30	18x4	153	400	980	1060	1268	180	SA 14.6-F14	300-500	58	356	385
450	330	-	30	4	640	548	585 (565)	31(28)	20	385	332	175	140	30	18x4	153	400	1050	1130	1340	180	SA 14.6-F14	300-500	65	452	-
500	350	700	32	4	715	582	650 (620)	34 (28)	20	385	332	175	140	30	18x4	153	400	1160	1240	1555	180	SA 14.6-F14	300-500	63	529	608
600	390	800	36	5	840	682	770 (725)	37 (31)	20	385	332	175	140	30	18x4	153	400	1330	1400	1650	180	SA 14.6-F14	300-500	77	708	845

We reserve the rights to modify the production program and the given data without separate notices due to the permanent company development.

Centric butterfly valve for gas
wafer type

PN10
PN16

GAS

Centric butterfly valve DN65

Product description (standard execution):

- Body made of ductile cast iron EN-GJS 400-15
- Centric disc made of stainless steel 1.4401
- NBR replaceable loose liner protected against axial displacement
- Stainless steel 1.4021 solid spline (not pinned) shaft with the bottom side seated in blind hole of the body
- Three-slide bearings
- Special shaped loose liner to seal with the shaft crossing
- O-ring's additional shaft sealing NBR
- For DN350 splined connection from DN400 with pin connections
- Actuator connector according to ISO 5211 (ISO top flange)
- Epoxy coating to EN 14901
- Product according to EN 13774; EN 1074-1; EN 1074-2; EN-593
- End connection according to EN 1092-2 (DIN 2501), pressure PN10, PN16
- Face to face according to EN 558-A1 row 20 (DIN 3202)
- Product marking according to : EN 19, EN 1171

Application:

Gas lines and networks:natural gas-biogas
Working conditions:
temp. range -20˚C to +70˚C
pressure up to 1.6 MPa.

Execution variant:

With lever up to DN200,
With gear from DN400

Test control:

Water pressure test according to EN 1074-1, EN 1074- 2, EN 12266-1
Seat: 1,1 x PN;
Body: 1,5 x PN
Air pressure test according to EN 12266-1
Seat: 1,1 x PN;
Body: 1,1 x PN
Operation torque test

Installation:

DN40-DN250 in any position. Over DN250 shaft in horizontal position

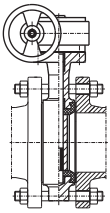

Accessories:

Gearbox
Electric multi-turn explosion proof actuators - version EX
Pneumatic actuator

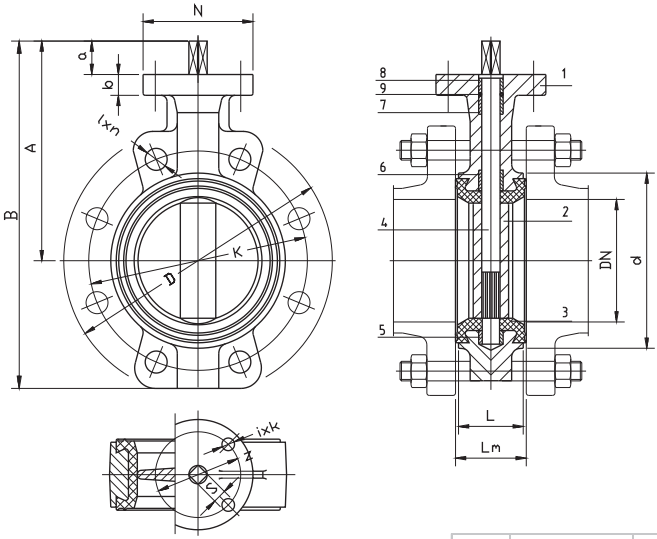

No.	Part	Standard execution
1	Body	Ductile cast iron EN-GJS-400-15 EN 1563
2	Disc	Steel 1.4401 EN 10088-1
3	Loose liner	Rubber NBR EN ISO 1629
4	Shaft	Stainless steel 1.4301 EN 10088-1
5, 6 7, 8	Bushing	PTFE Brass CW617N EN12165
9	O-ring	Rubber NBR ISO 1629

DN	PN			L	Lm	A	B	d	D		K		l		n		ISO 5211	i x k	N	z	S	a	Weight
	10	16	10 / 16						PN10	PN16	PN10	PN16	PN10	PN16	PN10	PN16							
[mm]	[bar]			[mm]											[szt]		-	[mm]					[kg]
40	–	–	v	33	36	121	176	76	150		110		19		4		F05	4x7	65	50	11	28	3
50	–	–	v	43	45	137	222	92	165		125		19		4		F05	4x7	65	50	11	28	4
65	–	–	v	46	49	150	235	106	185		145		19		4		F05	4x7	65	50	11	28	5
80	–	–	v	46	49	160	245	114	200		160		19		8		F05	4x7	65	50	11	30	7
100	–	–	v	52	55	182	280	143	220		180		19		8		F07	4x9	90	70	14	30	8
125	–	–	v	56	59	207	328	170	250		210		19		8		F07	4x9	90	70	14	30	8
150	–	–	v	56	59	223	357	203	285		240		23		8		F07	4x9	90	70	17	30	13
200	–	–	v	60	63	255	418	252	340		295		23		12		F10	4x12	125	102	17	30	20
250	–	–	v	68	72	314	510	306	395	405	350	355	23	28	12		F10	4x12	125	102	22	40	29
300	–	–	v	78	82	342	564	364	445	460	400	410	23	28	12		F10	4x12	125	102	22	45	40
350	–	–	v	78	82	365	640	431	505	520	460	470	23	28	16		F10	4x12	125	102	22	45	47
400	–	–	v	102	106	410	725	480	565	580	515	525	28	31	16		F14	4x18	175	140	27	60	98
500	–	–	v	127	131	490	866	590	670	715	620	650	28	34	20		F14	4x18	175	140	36	65	185
600	–	–	v	154	158	565	1031	688	780	840	725	770	31	37	20		F16	4x22	210	165	36	66	275

We reserve the rights to modify the production program and the given data without seperate notices due to the permanent company development.

Ball valve for gas
full bore flanged

PN10
PN16

GAS

Ball valve DN50

Product description (standard execution):

- Ball seat made of PTFE interchangeable
- The ball is made of stainless steel in grade 1.4301
- The construction of the valve enables disassambling
- Spindle made of stainless steel improved in grade 1.4021
- NBR or Viton O-ring spindle seal + Teflon ring
- Interchangeable spindle seals
- Corrosion protection according to EN 14901
- Flange connections according to EN 1092-2 (DIN 2501), pressure PN16, PN25, PN40
- Face to face according to producer documentation JAFAR
- Body made of ductile cast iron EN-GJS 350-22-LT
- Product according to EN 13774; EN 1983
- Product marking according to : EN 19; EN 1171

Application:

Gas lines and networks.
Working conditions:
temp. from -30˚C up +110˚C
pressure up to 4.0 MPa

Execution variant:

For actuator
With electric or pneumatic actuator

Test control:

Water pressure test according to EN 1074-1; EN 1074- 2; EN 12266-1
Body: 1,5 x PN
Air pressure test according to EN 12266-1
Seat: 1,1 x PN
Body: 1,1 x PN
Torque operation test

Installation:

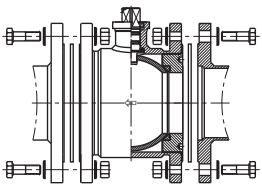

Accessories:

Pillar with handwheel - see: 9113
Pillar for electric actuator - see: 9114
Street box - see: 9305

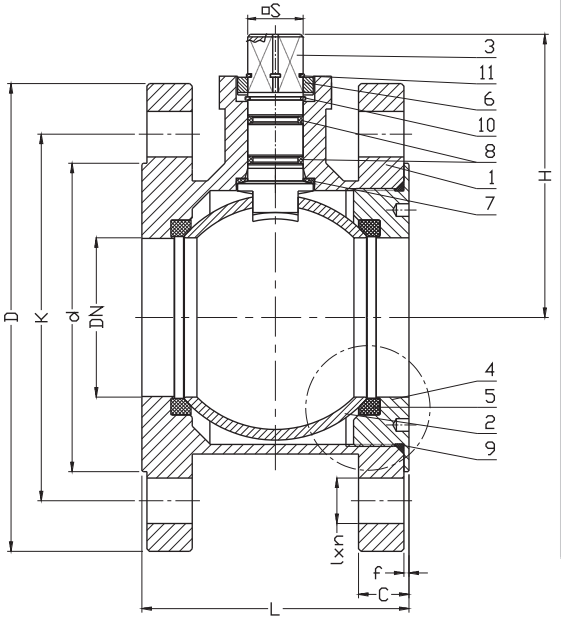

version

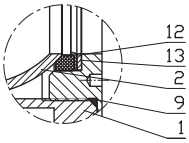

No.	Part	Standard execution
1	Body	Ductile cast iron EN-GJS 350-22 LT EN 1563
2	Ball	Steel 1.4301 EN 10088-1
3	Spindle	Steel 1.4021 EN 10088-1
4	Screw	Steel 1.0037 + Zn EN 10025-2
5	Ball seat	PTFE + C EN ISO 13000-1
6	Limiter	Steel 1.4301 EN 10088-1
7	Gasket	PTFE EN ISO 13000-1
8 9	O-ring	NBR VITON EN ISO 1629
10 11	Ring	Steel
12	Support plate	Steel 1.4301 EN 10088-1
13	Spring	Steel 1.4301 EN 10270-3

DN	L	PN	D	d	K	lxn	H	S	c	f	Kv	Weight
mm		bar	mm				mm				m3/h	kg
ductile cast iron												
40	77	16	150	88	110	4x19	90	11	19	2	105	5,4
50	86	16	165	102	125	4x19	98	17	19	2	163	6,8
65	106	16	185	122	145	8x19	112	17	19	2	275	9,7
80	120	16	200	138	160	8x19	130	22	19	2	418	11,2
100	160	16	220	158	180	8xM16	147	22	19	2	654	17,3
125	186	16	250	188	210	8xM16	164	22	19	2	1023	24,5

We reserve the rights to modify the production program and the given data without separate notices due to the permanent company development.

Gas filter
Flanged, 45 deg. flow

PN10
PN16

GAS

Filter DN50

Filter DN25

Product description (standard execution):

- Body and cover made of ductile cast iron EN-GJS 350-22-LT
- Body-to-cover o-ring seal: NBR elastomer (groove seated)
- Body bosses for drilling a gas vent (relief port) and a differential pressure gauge port on the inlet and outlet ends
- Cellulose filter element (see manufacturer's catalogue)
- Fast opening of the cover with stainless steel Allen socket screws
- ST-IGG-1501 compliant
- Face to face according to producer documentation JAFAR
- Epoxy coating minimum 250 microns according to EN 14901 GSK RAL Certyficate
- Flange connection according to EN 1092-2 (DIN 2501), design pressure rating: PN10 or PN16
- Product marking according to EN 19, EN 1171

Application:

Gas lines networks with a maximum operating pressure of 1.6 MPa and an operating temperature range from -30°C to +60°C

Execution variant:

Nonwoven fabric filter
Drilled bosses for 1/4" differential manometer

Test control:

Water pressure test according to EN 12266-1
Seat: 1,1 x PN;
Body: 1,5 x PN
Air pressure test according to EN 12266-1
Body: 1,1 x PN

Installation:

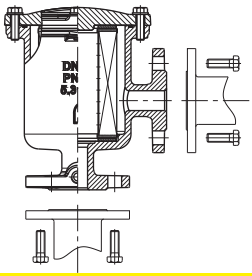

Accessories:

Differential manometer

7310

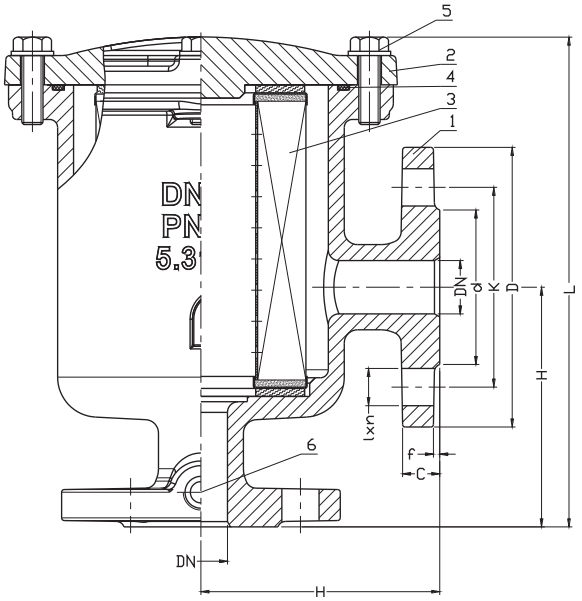

No.	Part	Standard execution
1	Body	Ductile cast iron EN-GJS-350-22-LT (5.3100) EN 1563
2	Bonnet	Ductile cast iron EN-GJS-350-22-LT (5.3100) EN 1563
3	Filter element	Cellulose or fabric Manufacturer's catalogue
4	O-ring	NBR EN ISO 1629
5	Screw	Stainless steel EN ISO 4762
6	Differential manometer boss	

DN	H	L	d	D	K	l	C	f	n	Filter cartridge	Weight
[mm]									-		[kg]
20	90	190	58	105	75	14	14	2	4	G0.5	6,2
25	90	190	68	115	85	14	14	2	4	G0.5	7
50	120	245	102	165	125	19	19	3	4	G 1	14
80	140	300	138	200	160	19	19	3	8	G 1.5	19

We reserve the rights to modify the production program and the given data without separate notices due to the permanent company development.

Gas filter
Flanged, straight flow

PN10
PN16

GAS

DN25 DN32 DN40

DN50

DN65 DN80 DN100 DN150

Product description (standard execution):

- Body and cover made of ductile cast iron EN-GJS 400-15, EN-GJS 350-22-LT, steel L360NB/P355NL
- Cover made of P355NL steel, EN-GJS 350-22-LT ductile iron
- Body-to-cover o-ring seal: NBR elastomer (groove seated)
- Body bosses for drilling a gas vent (relief port) and a differential pressure gauge port on the inlet and outlet ends
- Cellulose filter element (see manufacturer's catalogue)
- Fast opening of the cover with stainless steel Allen socket screws
- ST-IGG-1501:2011 compliant
- Face to face according to producer documentation JAFAR
- Epoxy coating minimum 250 microns according to EN 14901 zinc coating in accordance with EN ISO 4042 GSK RAL Certificate
- Flange connection according to EN 1092-1, EN 1092-2 (DIN 2501) design pressure rating: PN10 or PN16
- Product marking according to EN 19, EN 1171
- Drilled bosses for 1/4" differential manometer and/or 3/8" relief port

Application:

Gas lines networks with a maximum operating pressure of 1.6 MPa and an operating temperature range from -30°C to +60°C
for EN-GJS 400-15 temperature range from -20 ° C to + 60 ° C

Execution variant:

Nonwoven fabric filter

Test control:

Water pressure test according to EN 12266-1
Seat: 1,1 x PN;
Body: 1,5 x PN
Air pressure test according to EN 12266-1
Body: 1,1 x PN

Installation:

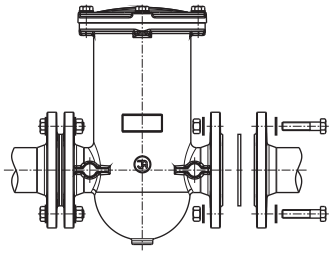

Accessories:

Differential manometer

DN25 DN32 DN40

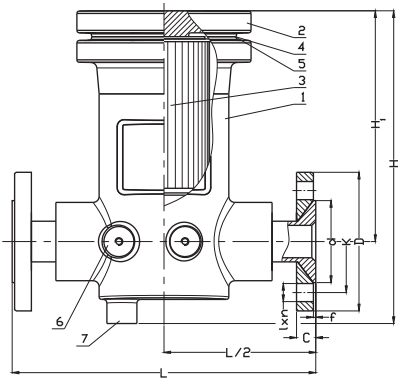

No.	Part	Standard execution
1	Body	Ductile cast iron EN-GJS-350-22-LT EN 1563 Steel L360NB EN ISO 3183, P355NL EN 10216
2	Bonnet	Ductile cast iron EN-GJS-350-22-LT EN 1563 Steel P355NL EN 10216
3	Filter element	Cellulose or fabric Manufacturer's catalogue
4	O-ring	NBR EN ISO 1629
5	Screw	Stainless steel EN ISO 4762
6	Differential manometer boss	
7	Relief port boss	

DN50

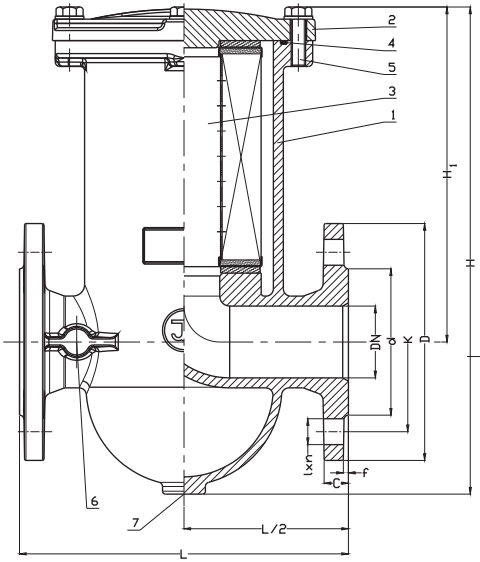

DN65 DN80 DN100 DN150

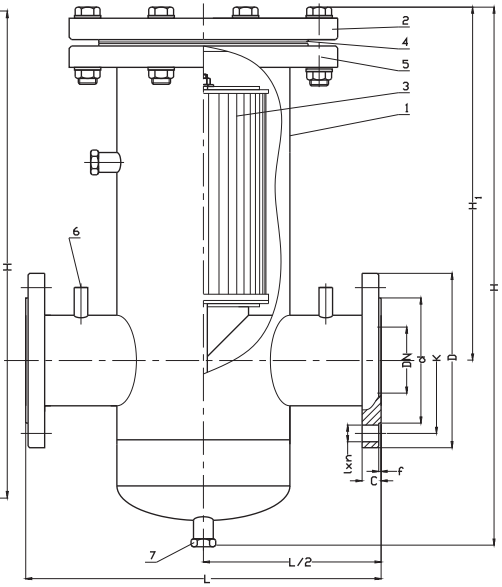

DN	H	H1	L	d	D	K	l	C	f	n	Filter cartridge	Weight
[mm]										-	-	[kg]
Ductile cast iron EN-GJS 400-15												
25	266	198	280	65	115	85	14	19	3	4	G0.5	15
32	266	198	280	76	140	100	19	19	3	4	G0.5	15
40	266	198	280	84	150	110	19	19	3	4	G0.5	17,5
Ductile cast iron EN-GJS 350-22-LT												
50	330	220	230	99	165	125	19	19	3	4	G1	15
Steel L360NB/P355NL												
65	305	260	350	118	185	145	19	19	3	4	G1	27,5
80	495	325	400	132	200	160	19	19	3	8	G1.5	42
100	670	435	450	156	220	180	19	19	3	8	G2	68
150	830	495	600	211	285	240	23	19	3	8	G3	128

We reserve the rights to modify the production program and the given data without separate notices due to the permanent company development.

Spindle extension
rigid

PN10
PN16

GAS

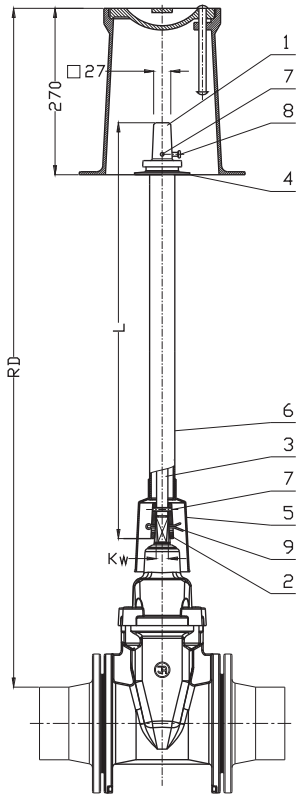

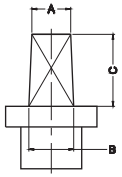

Cap dimensions:

A = 12 mm B = 15 mm C = 27 mm	S12
A = 27 mm B = 32 mm C = 50 mm	S27

No.	Part	Standard execution
1	Cap	Ductile cast iron EN-GJS 400-15 EN 1563
2	Coupling	Ductile cast iron EN-GJS-400-15 EN 1563
3	Spindle	Galvanized steel Steel Fe/Zn5 EN 10025-2
4	Collar	Polyethylene PE EN ISO 17855-1
5	Pipe bell	Polyethylene PE EN ISO 17855-1
6	Casing liner	Polyethylene PE EN ISO 17855-1
7	Spring pin	Steel 60G; Stainless steel EN ISO 8752
8	Screw	Steel Fe/Zn5 EN ISO 4017
9	Split cotter	Steel Fe/Zn5 EN ISO 1234

TYP 9006		L [mm] / Weight [kg]					
DN	K_w	RD 750	RD 1000	RD 1250	RD 1500	RD 2000	RD 2500
25	12	437 1,8	687 2,5	937 3,1	1187 3,8	1687 5,1	2187 6,5
32	12	459 1,9	709 2,6	959 3,2	1209 3,8	1709 5,2	2209 6,6
40	14	392 1,7	642 2,4	892 3,0	1142 3,6	1642 5,0	2142 6,4
50	14	387 1,7	637 2,4	887 3,0	1137 3,6	1637 5,0	2137 6,4
65	17	366 1,6	616 2,3	866 3,0	1116 3,7	1616 5,1	2116 6,5
80	17	348 1,5	598 2,2	848 2,9	1098 3,6	1598 5,0	2098 6,4
100	19	323 1,5	573 2,2	823 2,9	1073 3,6	1573 5,0	2073 6,4
125	19	296 1,4	546 2,1	796 2,8	1046 3,5	1546 4,9	2046 6,3
150	19	-	467 1,9	717 2,6	967 3,3	1467 4,7	1967 6,1
200	24	-	447 2,6	697 3,4	947 4,2	1447 5,9	1947 7,6
250	27	-	374 2,3	624 3,1	874 4,0	1374 5,7	1874 7,4
300	27	-	325 2,1	575 2,9	825 3,8	1325 5,5	1825 7,2
350	27	-	268 1,9	518 2,7	768 3,6	1268 5,3	1768 7,0
400	32	-	-	332 3,2	582 4,5	1082 7,1	1582 9,8
500	36	-	-	-	427 3,8	927 6,4	1427 9,1
600	36	-	-	-	308 3,1	808 5,8	1308 8,4

Product description (standard execution):

- The possibility of shortening the mounting surface area
- Made of ductile cast iron EN-GJS 400-15
- Galvanized steel squere section 18mm
- Ductile cast iron EN-GJS 400-15 coupling mounted on the valve spindle with the split cotter
- Extension spindle liner cap pipe bell and thrust washer made of PE
- Pipe bell protects against dirt penetration from the ground

Application:

Simple and rigid extension of the valve spindle. For manual operation of underground mounted armature.

Accessories:

With the position indicator: 9113, 9114
With T-key: 9015
With street box: 9505; 9506; 9507; 9508, 9514

We reserve the rights to modify the production program and the given data without separate notices due to the permanent company development

Telescopic spindle extension

PN10
PN16

GAS

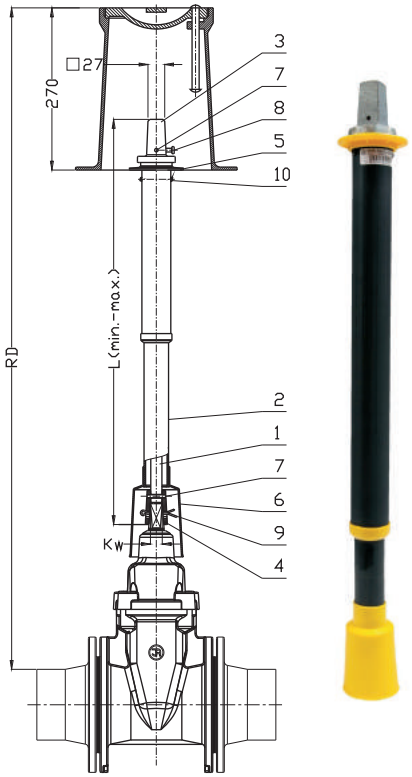

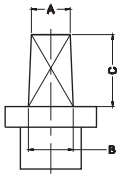

Cap dimensions:

A = 12 mm	
B = 15 mm	S12
C = 27 mm	
A = 27 mm	
B = 32 mm	S27
C = 50 mm	

No.	Part	Standard execution
1	Spindle	Galvanized steel Steel Fe/Zn5 EN 10025-2
2	Casing liner	Polyethylene PE EN ISO 17855-1
3	Cap	Ductile cast iron EN-GJS 400-15 EN 1563
4	Coupling	Ductile cast iron EN-GJS 400-15 EN 1563
5	Collar	Polyethylene PE EN ISO 17855-1
6	Pipe bell	Polyethylene PE EN ISO 17855-1
7	Spring pin	Steel Fe/Zn5 EN ISO 8752
8	Screw	Steel Fe/Zn5 EN ISO 4017
9	Split cotter	Steel Fe/Zn5 EN ISO 1234
10	Screw	Steel Fe/Zn5 EN ISO 7049

TYP 9007		RD 600-900		RD 900-1300		RD 1300-1800		RD 2000-2500		RD 2500-3100	
DN	Kw	$L_{(min)}$	$L_{(max)}$	$L_{(min)}$	$L_{(max)}$	$L_{(min)}$	$L_{(max)}$	$L_{(min)}$	$L_{(max)}$	$L_{(min)}$	$L_{(max)}$
		[mm]		[mm]		[mm]		[mm]		[mm]	
		Weight [kg]		Weight [kg]		Weight [kg]		Weight [kg]		Weight [kg]	
25	12	RD 750-925		RD 925-1300		986	1486	1686	2186	2237	2837
		436	611	611	986						
		2,2		3,1		4,1		5,3		13,0	
32	12	RD 725-925		RD 925-1300		1008	1508	1708	2208	2259	2859
		433	633	633	1008						
		2,3		3,2		4,1		5,3		13,0	
40	14	RD 775-950		RD 950-1300		941	1441	1641	2141	2198	2798
		416	591	591	941						
		2,2		3,0		4,0		5,2		13,1	
50	14	RD 775-950		RD 950-1300		936	1436	1636	2136	2193	2793
		411	586	586	936						
		2,2		3,0		4,0		5,2		13,1	
65	17	-		RD 975-1300		915	1415	1615	2115	2166	2766
				590	915						
				2,9		4,0		5,2		13,0	
80	17	-		RD 975-1300		897	1397	1597	2097	2148	2748
				572	897						
				2,9		4,0		5,1		12,9	
100	19	-		RD 1000-1300		872	1372	1572	2072	2123	2723
				572	872						
				2,8		3,9		5,1		12,8	
125	19	-		RD 1000-1300		845	1345	1545	2045	2096	2696
				545	845						
				2,8		3,9		5,0		12,7	
150	19	-		RD 1050-1300		766	1266	1466	1966	2017	2617
				516	766						
				2,6		3,7		4,9		12,4	
200	24	-		RD 1075-1325		RD 1325-1800		1426	1926	1965	2565
				501	751	751	1226				
				2,90		4,0		5,1		12,3	
250	27	-		RD 1125-1350		RD 1350-1800		1353	1853	1892	2492
				478	703	703	1153				
				2,80		3,9		5,1		12,1	
300	27	-		RD 1175-1375		RD 1375-1800		1304	1804	1843	2443
				479	679	679	1104				
				2,7		3,7		5,0		12,0	
350	27	-		RD 1200-1400		RD 1400-1800		1247	1747	1786	2386
				447	647	647	1047				
				2,7		3,6		4,9		11,8	
400	32	-		-		RD 1525-1800		1082	1582	1582	2182
						607	882				
						6,0		8,9		11,2	
500	36	-		-		RD 1600-1800		927	1427	1427	2027
						527	727				
						5,4		8,5		10,8	
600	36	-		-		RD 1650-1800		808	1308	1308	1908
						458	608				
						4,8		8,1		10,4	

Product description (standard execution):

- Spindle secured against tearing, the ability to adapt to the terrain in the given range
- Cap made of ductile cast iron EN-GJS-400-15
- The spindle tightly fitted into the square profile
- The coupling of ductile iron EN-GJS-400-15 mounted on the valve stem with the split cotter
- Casing liner cup pipe bell and thrust washer made of PE
- Pipe bell protects against pollution from the ground
- Height adjuster for setting casing at any height
- Pipe bell protects against pollution that are present in the ground
- Height adjuster for setting casing at any height

Application:

Flexible and safe extension of the valve stem. For manual operation of underground mounted armature

Accessories:

With the position indicator see: 9113, 9114
With T-key see: 9015
With street box see: 9505; 9506; 9507; 9508, 9514

We reserve the rights to modify the production program and the given data without separate notices due to the permanent company development

Repairing clamp GAS

PN16

GAS

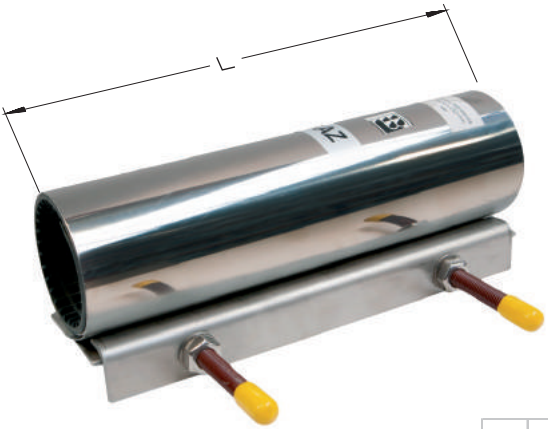

No.	Part	Standard execution
1	Body	Stainless steel 1.4301 EN 10088-1
2	Gasket	Rubber NBR; EN ISO 1629 EN 681-1
3	Lock (L)	Stainless steel 1.4301 EN 10088-1
4	Moustache (U)	Stainless steel 1.4301 EN 10088-1
5	Screw	Stainless steel A2 EN ISO 4017
6	Nut	Stainless steel A4 EN ISO 4032
7	Washer	Stainless steel A2 EN ISO 7091
8	Cap	Polyethylene EN ISO 1872-1

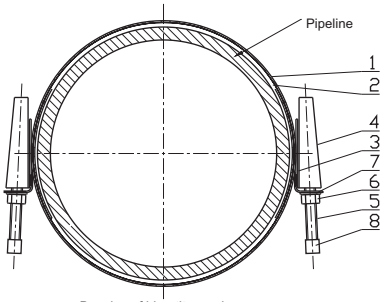

Drawing of bipartite version

DN	Lengths L /Range [mm]							
	90	100	150	200	250	300	400	500
15	.	.						
20	.	.						
25	29-37	29-37						
32	38-46	38-46						
40	46-54	46-54	46-54					
50	54-62	54-62	54-62	54-62	54-62			
65			72-81	72-81	72-81			
80				85-95	85-95	85-95		
100				106-116	106-116	106-116	106-116	
125				132-142	132-142	132-142	132-142	
150				154-164	154-164	154-164	154-164	154-164
150				165-175	165-175	165-175	165-175	165-175
175				184-194	184-194	184-194	184-194	184-194
200				215-225	215-225	215-225	215-225	215-225
200				226-236	226-236	226-236	226-236	226-236
200				237-247	237-247	237-247	237-247	237-247
225				254-264	254-264	254-264	254-264	254-264
250				265-285	265-285	265-285	265-285	265-285
300				305-325	305-325	305-325	305-325	305-325
300				338-358	338-358	338-358	338-358	338-358
350				366-386	366-386	366-386	366-386	366-386
400				400-420	400-420	400-420	400-420	400-420
400				421-441	421-441	421-441	421-441	421-441
450				468-498	468-498	468-498	468-498	468-498
500				499-529	499-529	499-529	499-529	499-529
500				515-545	515-545	515-545	515-545	515-545
600				600-630	600-630	600-630	600-630	600-630
600				620-650	620-650	620-650	620-650	620-650

The ranges shown in the table are for steel pipe O.D. The clamps can be fabricated for other O.D. ranges.

Product description (standard execution):

- Body and lock made of stainless steel EN 10088-1
- The lock clamp closure screws are welded along the entire length tangent to the sheet shell and coated with Teflon.
- Connections shall only be made with continuous welds in argon gas shield
- NBR corrugated sealing covering entire internal surface
- Clamps marked with the manufacture's label (acceptable diameter and material of pipe):
  - for diameters from DN15 to DN225 – single-part
  - for diameters from DN250 to DN450 – bipartite
  - for diameters from DN500 to DN600 and larger – tripartite
- Screws (EN ISO 4017),
  nuts (EN ISO 3242),
  washers (EN ISO 7091) made of stainless steel

Application:

For repairs of NG pipelines rated at 1.6 MPa and DN200 maximum or 1.0 MPa and DN225 minimum, from -20°C to +60°C.
Steel, PE and cast iron pipe clamps.

Specify the pipe O.D. when ordering.

Instalation:

In any position.

We reserve the rights to modify the production program and the given data without separate notices due to the permanent company development

Street box for GAS

PN10
PN16

GAS

Box for connectors H=150; 9505-PEHD-GJL

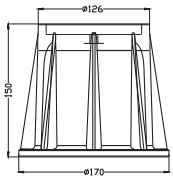

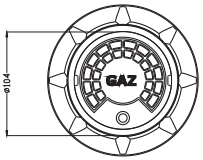

Material	Body PEHD
	Bonnet - Grey iron
Weight	2,0 [kg]
Comment	Marking on the bonnet GAS

Box for gate valve H=270; 9506-PEHD-GJL

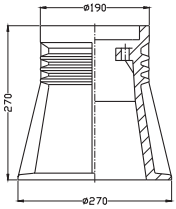

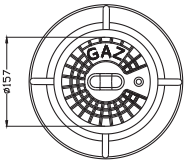

Material	Body PEHD
	Bonnet - Grey iron
Weight	4,0 [kg]
Comment	Dimension by DIN 4056
	Marking on the bonnet GAS; EN M-74081

Box for gate square H=272; 9507-PEHD-GJL

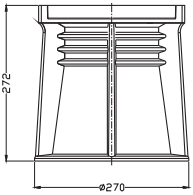

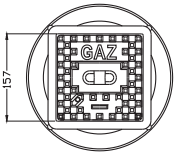

Material	Body PEHD
	Bonnet - Grey iron
Weight	5,0 [kg]
Comment	Dimension by DIN 3581
	Marking on the bonnet GAS EN-M-74081

Box for gate square H=248; 9514-PEHD-GJL

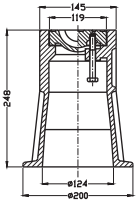

Material	Body PEHD
	Bonnet - Grey iron, Steel A2
Weight	3,6 [kg]
Comment	Dimension by DIN 4059
	Marking on the bonnet GAS EN-M-74081

Product description (standard execution):

- PEHD body - light weight
- No corrosion; longer service life; no maintenance
- Cover made of gray iron
- High resistance for load
- High positive and negative temperature resistant - frostproof
- Body design provides stable foundation in the ground
- Cover lifting eye

Application:

As an element of underground installation, intended to protect and enhance access to other accessories

Execution variant:

Stainless steel bolts
Ductile iron covers

Box for gate valve oval body H=310; 9508-PEHD-GJL

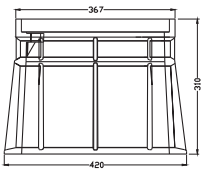

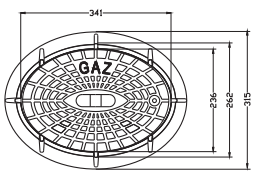

Material	Body PEHD
	Bonnet - Grey iron
Weight	10,0 [kg]
Comment	Dimension by DIN 4055
	Marking on the bonnet GAS

Box for gate valve H=270; 9506-GJL-GJL

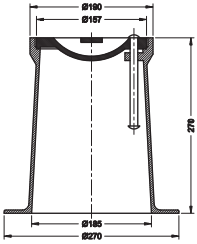

Body - Grey iron EN-GJL
Bonnet - Grey iron EN-GJL

Weight: 10 kg

Bitumen - protection coating

Sleeper plate ; 9521-PEHD and 9522-PEHD

To street box:

9505-PEHD-GJL
9506-PEHD-GJL
9507-PEHD-GJL
9506-GJL-GJL

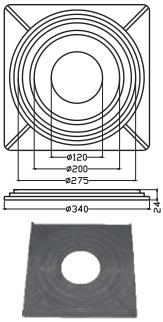

To street box:

9508-PEHD-GJL

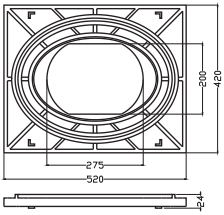

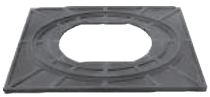

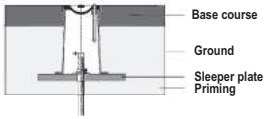

Mounting instruction:

Please check the compatibility with the order before mounting and its intended purpose. Prepare the surface of the hole and pay attention to its depth. Street boxes should be installed directly in natural subsoil or sandy ballast depending on ground conditions.
In order to ensure proper installation it is recommended to use sleeper plate to the street boxes

Mounting instruction:

1. Dig a hole
2. Align the excavation bottom, remove large and sharp stones.
3. Prepare layers that are not compacted with sand a thickness of 5 cm,
4. Match a sleeper plate to the suitable street box
5. Place the street box in a sleeper plate
6. Gradually sprinkle a sleeper plate layers and compact around the perimeter of the street box.
7. Provide adequate degree of compaction to existing ground conditions and subsequent load external.
8. Enclose the street box by cement or cube

We reserve the rights to modify the production program and the given data without separate notices due to the permanent company development

Valve control mode

SEWAGE WATER

Gate valve with spindle for handwheel

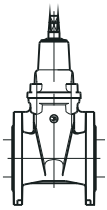

Gate valve with handwheel

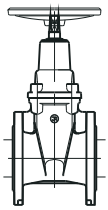

Gate valve with cap

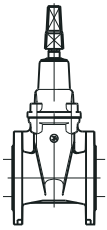

Gate valve with position indicator, prepared for handwheel

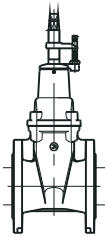

Gate valve with position indicator and a handwheel

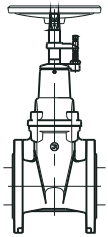

Gate valve with handwheel on a stand, with position indicator, in one casing

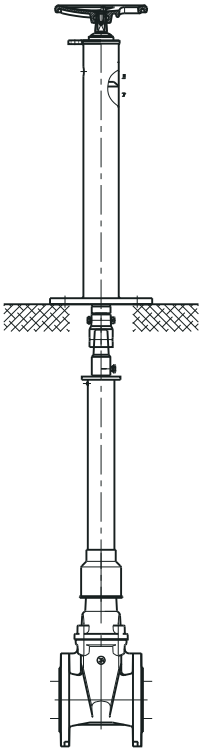

Gate valve with position indicator, induction sensors and a handwheel

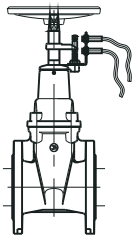

Gate valve with position indicator, electro-mechanical sensors and a handwheel

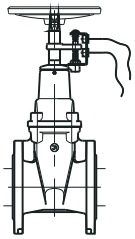

Gate valve with quick-closing lever

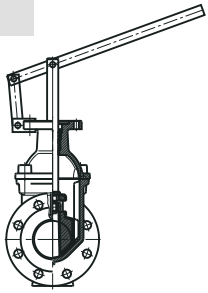

SEWAGE WATER Valve control mode

Gate valve prepared for drive installation, with spindle

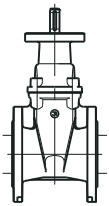

Gate valve with pneumatic actuator control

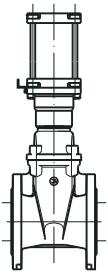

Gate valve with electro-mechanical drive

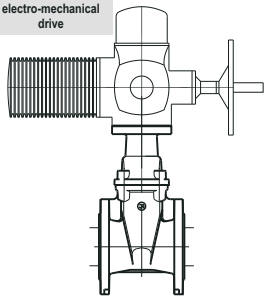

Gate valve with a handwheel on a stand, with position indicator, with drive shaft

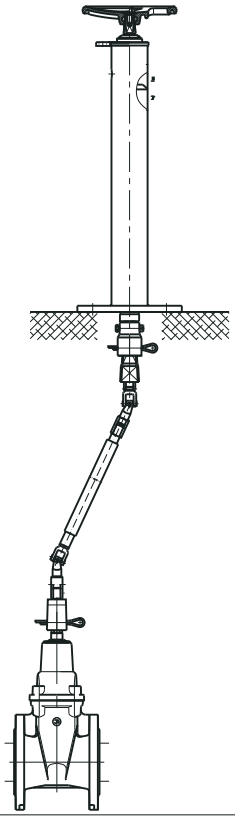

Gate valve with an electro-mechanical drive on a stand, with position indicator, with drive shaft

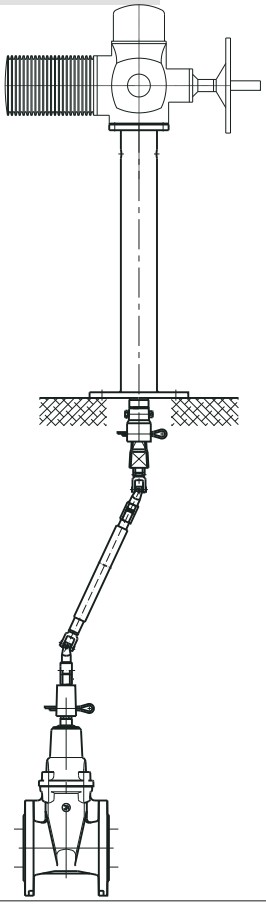

Gate valve with an electro-mechanical drive on a stand, with position indicator, in single casing

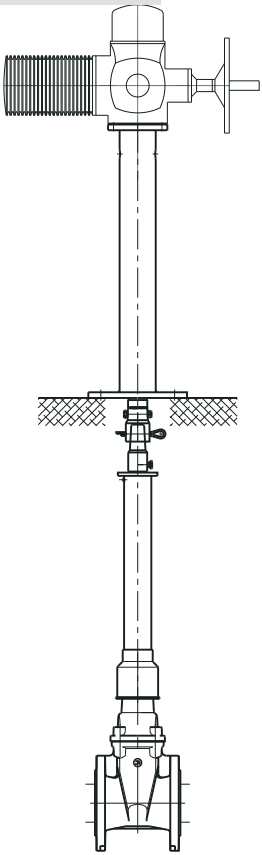

Valve control mode

SEWAGE WATER

Butterfly valve with spindle, without drive

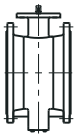

Butterfly valve with lever

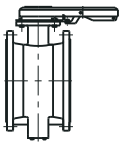

Butterfly valve with gear, with hand wheel control

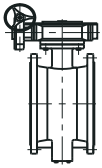

Butterfly valve with electro-mechanical drive

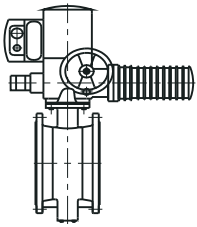

Butterfly valve with gear, with electro-mechanical drive

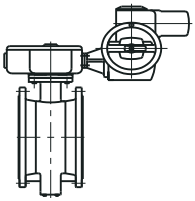

Butterfly valve with pneumatic drive

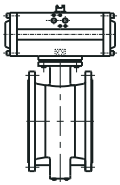

Butterfly valve with gear, controlled using casing

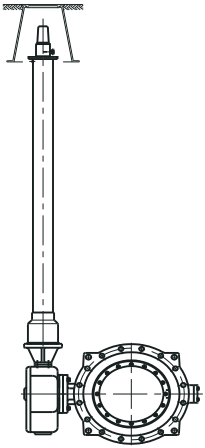

Butterfly valve with gear handwheel control, on a stand in one casing

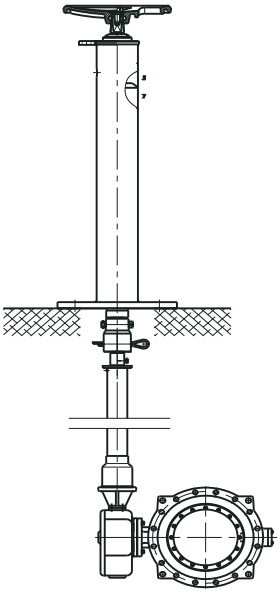
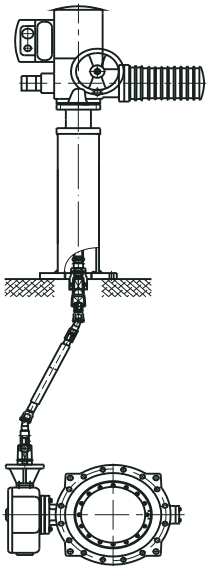
Butterfly valve with an electro-mechanical drive on a stand, connected with drive shaft